INTERNATIONAL STANDARD

ISO 15156-2

Fourth edition
2020-11

Petroleum and natural gas industries — Materials for use in H_2S-containing environments in oil and gas production —

Part 2: Cracking-resistant carbon and low-alloy steels, and the use of cast irons

Industries du pétrole et du gaz naturel — Matériaux pour utilisation dans des environnements contenant de l'hydrogène sulfuré (H_2S) dans la production de pétrole et de gaz —

Partie 2: Aciers au carbone et aciers faiblement alliés résistants à la fissuration, et utilisation de fontes

Reference number
ISO 15156-2:2020(E)

© ISO 2020

COPYRIGHT PROTECTED DOCUMENT

© ISO 2020

All rights reserved. Unless otherwise specified, or required in the context of its implementation, no part of this publication may be reproduced or utilized otherwise in any form or by any means, electronic or mechanical, including photocopying, or posting on the internet or an intranet, without prior written permission. Permission can be requested from either ISO at the address below or ISO's member body in the country of the requester.

ISO copyright office
CP 401 • Ch. de Blandonnet 8
CH-1214 Vernier, Geneva
Phone: +41 22 749 01 11
Email: copyright@iso.org
Website: www.iso.org

Published in Switzerland

Contents

Page

Foreword iv
Introduction v
1 Scope 1
2 Normative references 2
3 Terms and definitions 3
4 Symbols and abbreviated terms 6
5 Purchasing information 7
6 Factors affecting the behaviour of carbon and low alloy steels in H_2S-containing environments 7
7 Qualification and selection of carbon and low-alloy steels with resistance to SSC, SOHIC and SZC 8
7.1 Option 1 — Selection of SSC-resistant steels (and cast irons) using A.2 8
7.1.1 For p_{H_2S} < 0,3 kPa (0,05 psi) 8
7.1.2 For p_{H_2S} ≥ 0,3 kPa (0,05 psi) 8
7.2 Option 2 — Selection of steels for specific sour-service applications or for ranges of sour service 8
7.2.1 Sulfide stress cracking 8
7.2.2 SOHIC and SZC 10
7.3 Hardness requirements 10
7.3.1 General 10
7.3.2 Parent metals 10
7.3.3 Welds 11
7.4 Other fabrication methods 16
8 Evaluation of carbon and low alloy steels for their resistance to HIC/SWC 16
9 Marking, labelling, and documentation 17
Annex A (normative) **SSC-resistant carbon and low alloy steels (and requirements and recommendations for the use of cast irons)** 18
Annex B (normative) **Qualification of carbon and low-alloy steels for H_2S service by laboratory testing** 27
Annex C (informative) **Determination of H_2S partial pressure and use of alternative parameters** 35
Annex D (informative) **Recommendations for determining pH** 40
Annex E (informative) **Information that should be supplied for material purchasing** 45
Bibliography 47

© ISO 2020 – All rights reserved

Foreword

ISO (the International Organization for Standardization) is a worldwide federation of national standards bodies (ISO member bodies). The work of preparing International Standards is normally carried out through ISO technical committees. Each member body interested in a subject for which a technical committee has been established has the right to be represented on that committee. International organizations, governmental and non-governmental, in liaison with ISO, also take part in the work. ISO collaborates closely with the International Electrotechnical Commission (IEC) on all matters of electrotechnical standardization.

The procedures used to develop this document and those intended for its further maintenance are described in the ISO/IEC Directives, Part 1. In particular, the different approval criteria needed for the different types of ISO documents should be noted. This document was drafted in accordance with the editorial rules of the ISO/IEC Directives, Part 2 (see www.iso.org/directives).

Attention is drawn to the possibility that some of the elements of this document may be the subject of patent rights. ISO shall not be held responsible for identifying any or all such patent rights. Details of any patent rights identified during the development of the document will be in the Introduction and/or on the ISO list of patent declarations received (see www.iso.org/patents).

Any trade name used in this document is information given for the convenience of users and does not constitute an endorsement.

For an explanation of the voluntary nature of standards, the meaning of ISO specific terms and expressions related to conformity assessment, as well as information about ISO's adherence to the World Trade Organization (WTO) principles in the Technical Barriers to Trade (TBT), see www.iso.org/iso/foreword.html.

This document was prepared by Technical Committee ISO/TC 67, *Materials, equipment and offshore structures for petroleum, petrochemical and natural gas industries,* in collaboration with the European Committee for Standardization (CEN) Technical Committee CEN/TC 12, *Materials, equipment and offshore structures for petroleum, petrochemical and natural gas industries,* in accordance with the Agreement on technical cooperation between ISO and CEN (Vienna Agreement).

This fourth edition cancels and replaces the third edition (ISO 15156-2:2015), which has been technically revised. The main changes compared to the previous edition are as follows:

— corrections of temperature conversion for welding (see A.2.1.4), vold deformation and stress relief (see A.2.1.6), identification stamping (see A.2.1.9), tubulars and tubular components (see A.2.2.3.4), compressor impellers (see A.2.3.3.2);

— title change from Shear rams to Rams in A.2.3.2.2;

— addition of C110 and changes the designation of C95 to R95 in Table A.3;

— reference change to NACE TM0316 in Table B.1;

— addition of reference to BS 8701 in B.4.3;

— changes and additions to Table B.3;

— modification of Annex C to include alternative parameters and expanded explanation for the use of chemical activity and fugacity, and to provide some general guidance for the use of thermodynamic modeling for the determination of environmental severity.

A list of all parts in the ISO 15156 series can be found on the ISO website.

Any feedback or questions on this document should be directed to the user's national standards body. A complete listing of these bodies can be found at www.iso.org/members.html.

 © ISO 2020 – All rights reserved

Introduction

The consequences of sudden failures of metallic oil and gas field components, associated with their exposure to H_2S-containing production fluids, led to the preparation of the first edition of NACE MR0175, which was published in 1975 by the National Association of Corrosion Engineers, now known as NACE International.

The original and subsequent editions of NACE MR0175 established limits of H_2S partial pressure above which precautions against sulfide stress cracking (SSC) were always considered necessary. They also provided guidance for the selection and specification of SSC-resistant materials when the H_2S thresholds were exceeded. In more recent editions, NACE MR0175 has also provided application limits for some corrosion-resistant alloys, in terms of environmental composition and pH, temperature and H_2S partial pressures.

In separate developments, the European Federation of Corrosion issued EFC Publication 16 in 1995 and EFC Publication 17 in 1996. These documents are generally complementary to those of NACE though they differed in scope and detail.

In 2003, the publication of the ISO 15156-series and NACE MR0175/ISO 15156 was completed for the first time. These technically identical documents utilized the above sources to provide requirements and recommendations for materials qualification and selection for application in environments containing wet H_2S in oil and gas production systems. They are complemented by NACE TM0177 and NACE TM0284 test methods.

The revision of this document, i.e. ISO 15156-2,involves a consolidation of all changes agreed and published in the Technical Circular 1, ISO 15156-2:2015/Cir.1:2017, the Technical Circular 2, ISO 15156-2:2015/Cir.2:2018 and the Technical Circular 3, ISO 15156-2:2015/Cir.3:2019, published by the ISO 15156 series Maintenance Agency secretariat at DIN.

The changes were developed by and approved by the ballot of, representative groups from within the oil and gas production industry. The great majority of these changes stem from issues raised by document users. A description of the process by which these changes were approved can be found at the ISO 15156 series maintenance website: www.iso.org/iso15156maintenance.

When found necessary by oil and gas production industry experts, future interim changes to this document will be processed in the same way and will lead to interim updates to this document in the form of Technical Corrigenda or Technical Circulars. Document users should be aware that such documents can exist and can impact the validity of the dated references in this document.

The ISO 15156 series Maintenance Agency at DIN was set up after approval by the ISO Technical Management Board given in document 34/2007. This document describes the make up of the agency, which includes experts from NACE, EFC and ISO/TC 67, and the process for approval of amendments. It is available from the ISO 15156 series maintenance website and from the ISO/TC 67 Secretariat. The website also provides access to related documents that provide more detail of the ISO 15156 series maintenance activities.

© ISO 2020 – All rights reserved

Petroleum and natural gas industries — Materials for use in H_2S-containing environments in oil and gas production —

Part 2: Cracking-resistant carbon and low-alloy steels, and the use of cast irons

WARNING — Carbon and low-alloy steels and cast irons selected using this document are resistant to cracking in defined H_2S-containing environments in oil and gas production but not necessarily immune to cracking under all service conditions. It is the equipment user's responsibility to select the carbon and low alloy steels and cast irons suitable for the intended service.

1 Scope

This document gives requirements and recommendations for the selection and qualification of carbon and low-alloy steels for service in equipment used in oil and natural gas production and natural gas treatment plants in H_2S-containing environments, whose failure can pose a risk to the health and safety of the public and personnel or to the environment. It can be applied to help to avoid costly corrosion damage to the equipment itself. It supplements, but does not replace, the materials requirements of the appropriate design codes, standards or regulations.

This document addresses the resistance of these steels to damage that can be caused by sulfide stress cracking (SSC) and the related phenomena of stress-oriented hydrogen-induced cracking (SOHIC) and soft-zone cracking (SZC).

This document also addresses the resistance of these steels to hydrogen-induced cracking (HIC) and its possible development into stepwise cracking (SWC).

This document is concerned only with cracking. Loss of material by general (mass loss) or localized corrosion is not addressed.

Table 1 provides a non-exhaustive list of equipment to which this document is applicable, including exclusions.

This document applies to the qualification and selection of materials for equipment designed and constructed using load controlled design methods. For design utilizing strain-based design methods, see ISO 15156-1:2020, Clause 5.

Annex A lists SSC-resistant carbon and low alloy steels, and A.2.4 includes requirements for the use of cast irons.

This document is not necessarily suitable for application to equipment used in refining or downstream processes and equipment.

© ISO 2020 – All rights reserved

Table 1 — List of equipment

This document is applicable to materials used for the following equipment	Exclusions
Drilling, well construction and well-servicing equipment	Equipment exposed only to drilling fluids of controlled composition[a] Drill bits Blowout preventer (BOP) shear blades[b] Drilling riser systems Work strings Wireline and wireline equipment[c] Surface and intermediate casing
Wells, including subsurface equipment, gas lift equipment, wellheads and christmas trees	Sucker rod pumps and sucker rods[d] Electric submersible pumps Other artificial lift equipment Slips
Flow-lines, gathering lines, field facilities and field processing plants	Crude oil storage and handling facilities operating at a total absolute pressure below 0,45 MPa (65 psi)
Water-handling equipment	Water-handling facilities operating at a total absolute pressure below 0,45 MPa (65 psi) Water injection and water disposal equipment
Natural gas treatment plants	—
Transportation pipelines for liquids, gases and multiphase fluids	Lines handling gas prepared for general commercial and domestic use
For all equipment above	Components loaded only in compression

[a] See A.2.3.2.3 for more information.

[b] See A.2.3.2.1 for more information.

[c] Wireline lubricators and lubricator connecting devices are not excluded.

[d] For sucker rod pumps and sucker rods, reference can be made to NACE MR0176.

2 Normative references

The following documents are referred to in the text in such a way that some or all of their content constitutes requirements of this document. For dated references, only the edition cited applies. For undated references, the latest edition of the referenced document (including any amendments) applies.

ISO 6506 (all parts), *Metallic materials — Brinell hardness test*

ISO 6507 (all parts), *Metallic materials — Vickers hardness test*

ISO 6508 (all parts), *Metallic materials — Rockwell hardness test*

ISO 6892-1, *Metallic materials — Tensile testing — Part 1: Method of test at room temperature*

ISO 10423, *Petroleum and natural gas industries — Drilling and production equipment — Wellhead and christmas tree equipment*

ISO 15156-1:2020, *Petroleum and natural gas industries — Materials for use in H_2S-containing environments in oil and gas production — Part 1: General principles for selection of cracking-resistant materials*

ISO 15156-3, *Petroleum and natural gas industries — Materials for use in H_2S-containing environments in oil and gas production — Part 3: Cracking-resistant CRAs (corrosion-resistant alloys) and other alloys*

© ISO 2020 – All rights reserved

NACE TM0177[1)], *Laboratory testing of metals for resistance to sulfide stress cracking and stress corrosion cracking in H_2S environments*

NACE TM0284, *Evaluation of pipeline and pressure vessel steels for resistance to hydrogen-induced cracking*

NACE TM0316, *Four-point bend testing of materials for oil and gas applications*

SAE AMS-2430[2)], *Shot Peening*

3 Terms and definitions

For the purposes of this document, the terms and definitions given in ISO 15156-1 and the following apply.

ISO and IEC maintain terminological databases for use in standardization at the following addresses:

— ISO Online browsing platform: available at https://www.iso.org/obp

— IEC Electropedia: available at http://www.electropedia.org/

3.1
Brinell hardness
HBW
hardness value of a material measured normally using a 10 mm diameter tungsten carbide ball indenter with a force of 29,42 kN

Note 1 to entry: The measurement shall be in accordance with the ISO 6506 series. Here, ASTM E10 is equivalent to ISO 6506-1.

3.2
bubble-point pressure
p_B
pressure under which gas bubbles form in a liquid at a particular operating temperature

Note 1 to entry: See C.2.

3.3
burnishing
process of smoothing surfaces using frictional contact between the material and some other hard pieces of material, such as hardened steel balls

3.4
casting
metal that is obtained at or near its finished shape by the solidification of molten metal in a mould

3.5
cast iron
iron-carbon alloy containing approximately 2 % to 4 % mass fraction carbon

3.5.1
grey cast iron
cast iron that displays a grey fracture surface due to the presence of flake graphite

3.5.2
white cast iron
cast iron that displays a white fracture surface due to the presence of cementite

1) www.nace.org

2) www.sae.org

© ISO 2020 – All rights reserved

3.5.3
malleable iron
white cast iron that is thermally treated to convert most or all of the cementite to graphite (temper carbon)

3.5.4
ductile iron
nodular cast iron
cast iron that has been treated while molten with an element (usually magnesium or cerium) that spheroidizes the graphite

3.6
cementite
microstructural constituent of steels composed principally of iron carbide (Fe_3C)

3.7
cold deforming
cold forging
cold forming
cold working
deforming metal plastically under conditions of temperature and strain rate that induce strain-hardening, usually, but not necessarily, conducted at room temperature

3.8
fitness-for-purpose
suitability for use under the expected service conditions

3.9
free-machining steel
steel to which elements such as sulfur, selenium and lead have been added intentionally to improve machineability

3.10
lower critical temperature
temperature of a ferrous metal at which austenite begins to form during heating or at which the transformation of austenite is completed during cooling

3.11
nitriding
case-hardening process in which nitrogen is introduced into the surface of metallic materials (most commonly ferrous alloys)

EXAMPLE Liquid nitriding, gas nitriding, ion nitriding and plasma nitriding.

3.12
normalize
heating a ferrous metal to a suitable temperature above the transformation range (austenitizing), holding at temperature for a suitable time and then cooling in still air (or protective atmosphere) to a temperature substantially below the transformation range

3.13
plastically deformed
permanently deformed by stressing beyond the limit of elasticity, i.e. the limit of proportionality of stress to strain

3.14
pressure-containing part
part whose failure to function as intended results in a release of retained fluid to the atmosphere

EXAMPLE Valve bodies, bonnets and stems.

© ISO 2020 – All rights reserved

3.15
quenched and tempered
quench hardened and then tempered

3.16
Rockwell C hardness
HRC
hardness value of a material measured using a Rockwell C diamond cone indenter with a force of 1 471 N

Note 1 to entry: The measurement shall be in accordance with the ISO 6508 series. Here, ASTM E18 is equivalent to ISO 6508-1.

3.17
shot-peening
inducing compressive stresses in the surface layer of a material by bombarding it with a selected medium (usually round steel shot) under controlled conditions

3.18
stress relief
heating a metal to a suitable temperature, holding at that temperature long enough to reduce residual stresses, and then cooling slowly enough to minimize the development of new residual stresses

3.19
tempering
heat treatment by heating to a temperature below the lower critical temperature, for the purpose of decreasing the hardness and increasing the toughness of hardened steel, hardened cast iron and, sometimes, normalized steel

3.20
tensile strength
ultimate strength
ratio of maximum load to original cross-sectional area

Note 1 to entry: See ISO 6892-1.

3.21
test batch
group of items representing a production batch whose conformity with a specified requirement can be determined by testing representative samples in accordance with a defined procedure

3.22
tubular component
cylindrical component (pipe) having a longitudinal hole, used in drilling/production operations for conveying fluids

3.23
Vickers hardness
HV
hardness value of a material using a diamond pyramid indenter and one of a variety of possible applied loads

Note 1 to entry: The measurement shall be in accordance with the ISO 6507 series. Here, ASTM E384 is equivalent to ISO 6507-1.

3.24
weldment
portion of a component on which welding has been performed, including the weld metal, the heat-affected zone, and the adjacent parent metal

© ISO 2020 – All rights reserved

3.25
weld metal
portion of a weldment that has been molten during welding

3.26
wrought
formed to a desired shape by working (rolling, extruding, forging, etc.), usually at an elevated temperature

4 Symbols and abbreviated terms

AYS	actual yield strength
CLR	crack length ratio
CSR	crack surface ratio
CTR	crack thickness ratio
DCB	double cantilever beam (test)
FPB	four-point bend (test)
HBW	Brinell hardness
HIC	hydrogen-induced cracking
HRC	Rockwell hardness (scale C)
HSC	hydrogen stress cracking
OCTG	oil country tubular goods, i.e. casing, tubing and drill pipe
p_{H_2S}	partial pressure of H_2S
p_{CO_2}	partial pressure of CO_2
$R_{p0,2}$	0,2 % proof stress in accordance with ISO 6892-1
SMYS	specified minimum yield strength
SOHIC	stress-oriented hydrogen-induced cracking
SSC	sulfide stress cracking
SWC	stepwise cracking
SZC	soft-zone cracking
T	temperature
UNS	Unified Numbering System (from SAE-ASTM, *Metals and alloys in the Unified Numbering System*)
UT	uniaxial tensile (test)

© ISO 2020 – All rights reserved

5 Purchasing information

5.1 The preparation of material purchasing specifications can require co-operation and exchange of data between the equipment user, the equipment supplier and the material manufacturer to ensure that the material purchased conforms with ISO 15156-1 and this document.

5.2 The following information shall be provided:

— preferred material types and/or grades (if known);

— equipment type (if known);

— reference to this document;

— acceptable bases for selection of materials for SSC resistance (see Clause 7);

— requirements for HIC resistance (see Clause 8).

5.3 The equipment user and the equipment supplier/material manufacturer may agree that carbon or low-alloy steels other than those described and/or listed in Annex A may be selected subject to suitable qualification testing in accordance with Annex B and ISO 15156-1. The qualification requirements may be extended to include resistance to SOHIC and SZC.

If the purchaser intends to make use of such agreements, extensions and qualifications, the appropriate additional information shall be clearly indicated in the materials purchasing specification. This information may include

— requirements for SSC testing (see 7.1 and 7.2),

— service conditions for specific sour-service application, and

— other special requirements.

5.4 Annex C describes how to calculate the H_2S partial pressure and Annex D gives guidance on how to determine the pH-value of a fluid.

5.5 The information required for material purchasing shall be entered on suitable data sheets. Suggested formats are given in Annex E.

6 Factors affecting the behaviour of carbon and low alloy steels in H_2S-containing environments

The behaviour of carbon and low-alloy steels in H_2S-containing environments is affected by complex interactions of parameters, including the following:

a) chemical composition, method of manufacture, product form, strength, hardness of the material and its local variations, amount of cold work, heat-treatment condition, microstructure, microstructural uniformity, grain size and cleanliness of the material;

b) H_2S partial pressure or equivalent concentration in the water phase;

c) chloride ion concentration in the water phase;

d) acidity (pH) of the water phase;

e) presence of sulfur or other oxidants;

f) exposure to non-production fluids;

© ISO 2020 – All rights reserved

g) exposure temperature;

h) total tensile stress (applied plus residual);

i) exposure time.

These factors shall be considered when using this document for the selection of materials suitable for environments containing H_2S in oil and gas production systems.

7 Qualification and selection of carbon and low-alloy steels with resistance to SSC, SOHIC and SZC

7.1 Option 1 — Selection of SSC-resistant steels (and cast irons) using A.2

7.1.1 For p_{H_2S} < 0,3 kPa (0,05 psi)

The selection of materials for SSC resistance for p_{H_2S} below 0,3 kPa (0,05 psi) is not considered in detail in this document. Normally, no special precautions are required for the selection of steels for use under these conditions, nevertheless, highly susceptible steels can crack. Additional information on factors affecting susceptibility of steels and attack by cracking mechanisms other than SSC is given in 7.2.1.

7.1.2 For p_{H_2S} ≥ 0,3 kPa (0,05 psi)

If the partial pressure of H_2S in the gas is equal to or greater than 0,3 kPa (0,05 psi), SSC-resistant steels shall be selected using A.2.

NOTE 1 The steels described or listed in A.2 are considered resistant to SSC in oil and natural-gas production and natural-gas treatment plants.

NOTE 2 Users concerned with the occurrence of SOHIC and/or SZC can refer to Option 2 (see 7.2.2).

NOTE 3 For HIC and SWC, see Clause 8.

7.2 Option 2 — Selection of steels for specific sour-service applications or for ranges of sour service

7.2.1 Sulfide stress cracking

7.2.1.1 General

Option 2 allows the user to qualify and select materials for sulfide stress cracking (SSC) resistance for specific sour-service applications or for ranges of sour service.

For a given material, the limits of environmental and metallurgical variables defined for specific sour service or for a range of sour service by qualification in accordance with Option 2 may replace any limits of environmental and metallurgical variables listed for that material in A.2 (Option 1).

The use of option 2 can require knowledge of both the in situ pH and the H_2S partial pressure and their variations with time; see ISO 15156-1.

Option 2 facilitates the purchase of bulk materials, such as OCTG or line pipe, where the economic incentive to use materials not described nor listed in Annex A outweighs the additional qualification and other costs that can be incurred. Steels for other equipment may also be qualified. In some cases, this requires an agreement between the supplier and the equipment user with respect to test and acceptance requirements. Such agreements shall be documented.

Option 2 can also facilitate fitness-for-purpose evaluations of existing carbon or low-alloy steel equipment exposed to sour-service conditions more severe than assumed in the current design.

 © ISO 2020 – All rights reserved

7.2.1.2 SSC regions of environmental severity

The severity of the sour environment, determined in accordance with ISO 15156-1, with respect to the SSC of a carbon or low-alloy steel shall be assessed using Figure 1. In defining the severity of the H_2S-containing environment, the possibility of exposure to unbuffered, condensed aqueous phases of low pH during upset operating conditions or downtime, or to acids used for well stimulation and/or the backflow of stimulation acid after reaction should be considered.

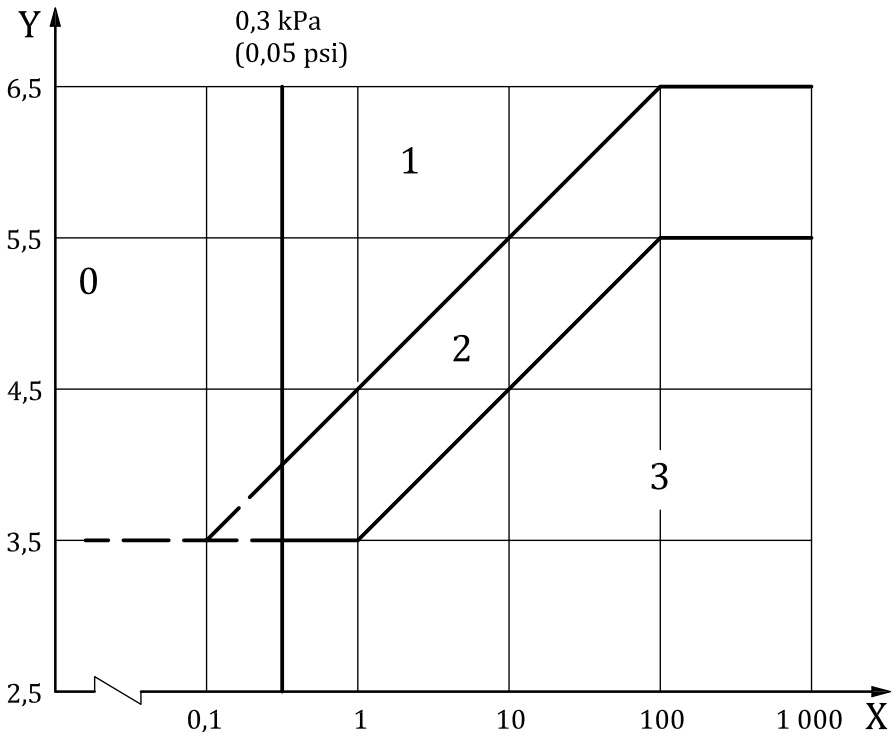

Key

X H_2S partial pressure, expressed in kilopascals

Y in situ pH

0 region 0

1 SSC region 1

2 SSC region 2

3 SSC region 3

NOTE 1 The discontinuities in the figure below 0,3 kPa (0,05 psi) and above 1 MPa (150 psi) partial pressure H_2S reflect uncertainty with respect to the measurement of H_2S partial pressure (low p_{H_2S}) and the steel's performance outside these limits (for both low and high p_{H_2S}).

NOTE 2 Guidance on the calculation of H_2S partial pressure is given in Annex C.

NOTE 3 Guidance on the calculation of pH is given in Annex D.

Figure 1 — Regions of environmental severity with respect to the SSC of carbon and low-alloy steels

© ISO 2020 – All rights reserved

7.2.1.3 Region 0 — For p_{H_2S} < 0,3 kPa (0,05 psi)

Normally, no precautions are required for the selection of steels for use under these conditions. Nevertheless, a number of factors, as follows, that can affect a steel's performance in this region should be considered.

— Steels that are highly susceptible to SSC and HSC can crack.

— Steel's physical and metallurgical properties affect its inherent resistance to SSC and HSC; see Clause 6.

— Very high-strength steels can suffer HSC in aqueous environments without H_2S. Above about 965 MPa (140 ksi) yield strength, attention should be given to steel composition and processing to ensure that these steels do not exhibit SSC or HSC in region 0 environments.

— Stress concentrations increase the risk of cracking.

7.2.1.4 SSC regions 1, 2 and 3

Referring to the regions of severity of the exposure as defined in Figure 1, steels for region 1 may be selected using A.2, A.3 or A.4; steels for region 2 may be selected using A.2 or A.3; and steels for region 3 may be selected using A.2.

In the absence of suitable choices from Annex A, carbon and low-alloy steels may be tested and qualified for use under specific sour-service conditions or for use throughout a given SSC region. Testing and qualification shall be in accordance with ISO 15156-1 and Annex B.

Documented field experience may also be used as the basis for material selection for a specific sour-service application; see ISO 15156-1.

7.2.2 SOHIC and SZC

The user should consider SOHIC and SZC, as defined in ISO 15156-1, when evaluating carbon steels in plate form and their welded products for sour service in H_2S-containing environments.

B.4 provides guidance on test methods and acceptance criteria to evaluate resistance to SOHIC and SZC.

NOTE The occurrence of these phenomena is rare and they are not well understood. They have caused sudden failures in parent steels (SOHIC) and in the HAZ of welds (SOHIC and SZC). Their occurrence is thought to be restricted to carbon steels. The presence of sulfur or oxygen in the service environment is thought to increase the probability of damage by these mechanisms.

7.3 Hardness requirements

7.3.1 General

The hardness of parent materials and of welds and their heat-affected zones play important roles in determining the SSC resistance of carbon and low alloy steels. Hardness control can be an acceptable means of obtaining SSC resistance.

7.3.2 Parent metals

If hardness measurements on parent metal are specified, sufficient hardness tests shall be made to establish the actual hardness of the steel being examined. Individual HRC readings exceeding the value permitted by this document may be considered acceptable if the average of several readings taken within close proximity does not exceed the value permitted by this document and no individual reading is greater than 2 HRC above the specified value. Equivalent requirements shall apply to other

 © ISO 2020 – All rights reserved

methods of hardness measurement when specified in this document or referenced in a manufacturing specification.

NOTE The number and location of hardness tests on parent metal are not specified in the ISO 15156 series.

For ferritic steels, EFC Publication 16[38] shows graphs for the conversion of hardness readings, from Vickers (HV) to Rockwell (HRC) and from Vickers (HV) to Brinell (HBW), derived from the tables of ASTM E140 and ISO 18265. Other conversion tables also exist. Users may establish correlations for individual materials.

7.3.3 Welds

7.3.3.1 General

The metallurgical changes that occur on welding carbon and low-alloy steels affect their susceptibility to SSC, SOHIC and SZC.

Processes and consumables should be selected in accordance with good practice and to achieve the required cracking resistance.

Welding shall be carried out in conformance with appropriate codes and standards as agreed between the supplier and the purchaser. Welding procedure specifications (WPSs) and procedure qualification records (PQRs) shall be available for inspection by the equipment user.

The qualification of welding procedures for sour service shall include hardness testing in accordance with 7.3.3.2, 7.3.3.3 and 7.3.3.4.

7.3.3.2 Hardness testing methods for welding procedure qualification

Hardness testing for welding procedure qualification shall normally be carried out using the Vickers HV 10 or HV 5 method in accordance with ISO 6507-1, or the Rockwell method in accordance with ISO 6508-1 using the 15N scale.

NOTE For the purposes of this provision, ASTM E384 is equivalent to ISO 6507-1 and ASTM E18 is equivalent to ISO 6508-1.

The HRC method may be used for welding procedure qualification if the design stress does not exceed two-thirds of SMYS and the welding procedure specification includes post-weld heat treatment. The use of the HRC method for welding procedure qualification in all other cases shall require the agreement of the equipment user.

NOTE Hardness surveys using the Vickers or Rockwell 15N testing method produce a more detailed picture of weld hardness and its variations. Hardness surveys using the HRC testing method might not detect small zones in welds or HAZs where the hardness exceeds the acceptance criteria for the Vickers or Rockwell 15N testing method. The significance of such small hard zones is not well understood.

The use of other hardness testing methods shall require the agreement of the equipment user.

The Vickers or Rockwell 15N hardness testing method shall be used for the qualification of alternative weld-hardness acceptance criteria as permitted in 7.3.3.4.

7.3.3.3 Hardness surveys for welding procedure qualification

Vickers hardness surveys shall be in accordance with Figure 2 for butt welds, Figure 3 for fillet welds and Figure 4 for repair and partial penetration welds. HRC surveys of butt welds shall be in accordance with Figure 5. Survey requirements for other joint configurations shall be developed from these figures.

Hardness surveys for qualification of overlay welding procedures shall be in accordance with Figure 6.

© ISO 2020 – All rights reserved

Dimensions in millimetres

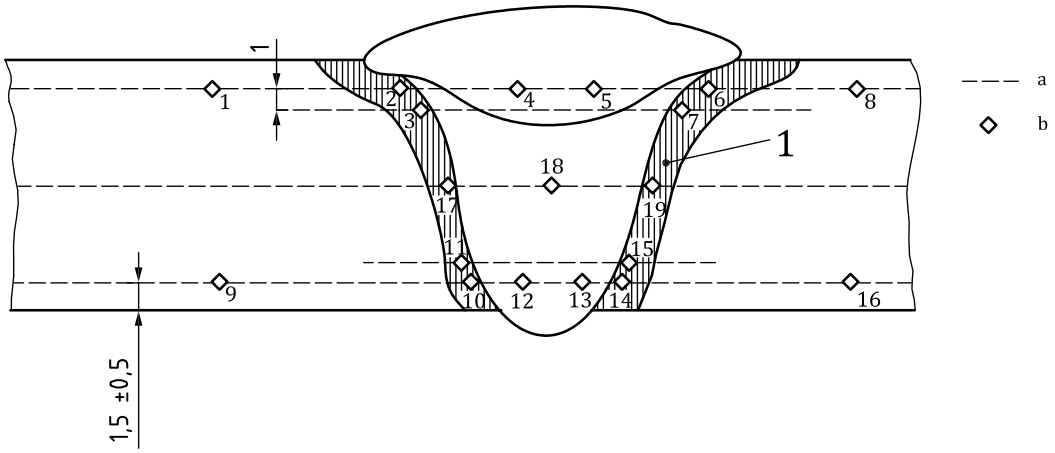

Key

1 weld heat-affected zone (visible after etching)

a Lines of survey.

b Hardness impressions: Impressions 2, 3, 6, 7, 10, 11, 14, 15, 17 and 19 should be entirely within the heat-affected zone and located as close as possible to the fusion boundary between the weld metal and the heat-affected zone.

The top line of survey should be positioned so that impressions 2 and 6 coincide with the heat-affected zone of the final run or change of profile of the fusion line associated with the final run.

Figure 2 — Butt-weld survey method for Vickers hardness measurement

© ISO 2020 – All rights reserved

Dimensions in millimetres

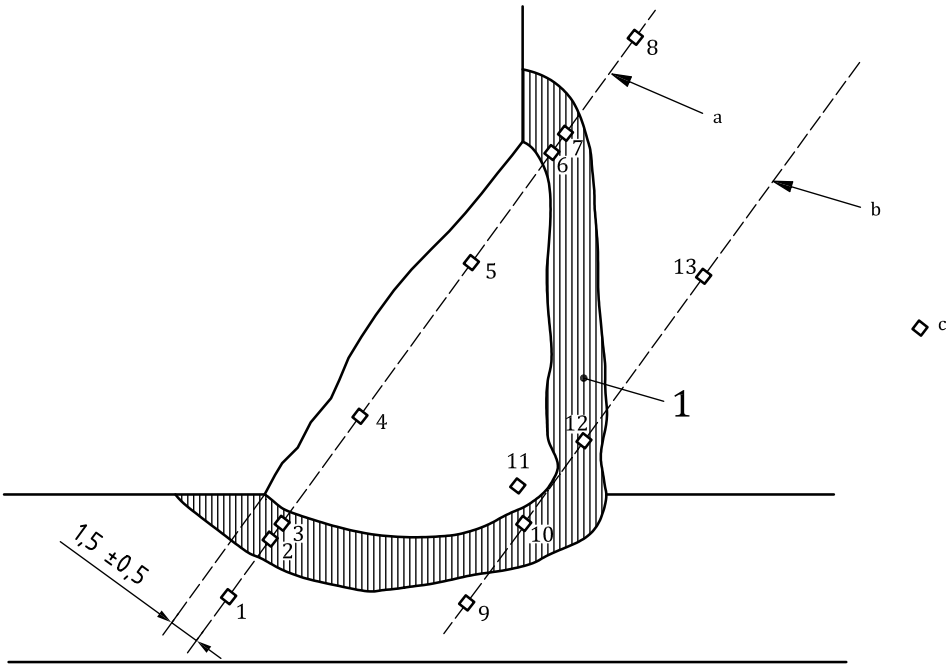

Key

1 weld heat-affected zone (visible after etching)

a Line of survey.

b Line of survey, parallel to line B and passing through the fusion boundary between the weld metal and the heat-affected zone at the throat.

c Hardness impressions: Impressions 3, 6, 10 and 12 should be entirely within the heat-affected zone and located as close as possible to the fusion boundary between the weld metal and the heat-affected zone.

Figure 3 — Fillet weld

© ISO 2020 – All rights reserved

Dimensions in millimetres

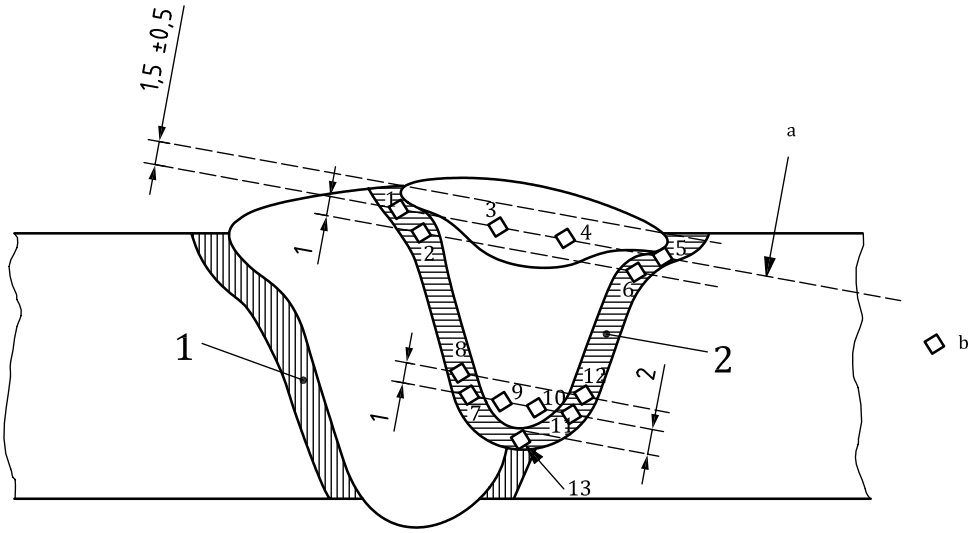

Key

1 original weld heat-affected zone

2 repair-weld heat-affected zone

a Parallel lines of survey.

b Hardness impressions: Impressions in the heat-affected zone should be located as close as possible to the fusion boundary.

The top line of survey should be positioned so that the heat-affected zone impressions coincide with the heat-affected zone of the final run or change in profile of the cap of fusion line associated with the final run.

Figure 4 — Repair and partial penetration welds

© ISO 2020 – All rights reserved

Dimensions in millimetres

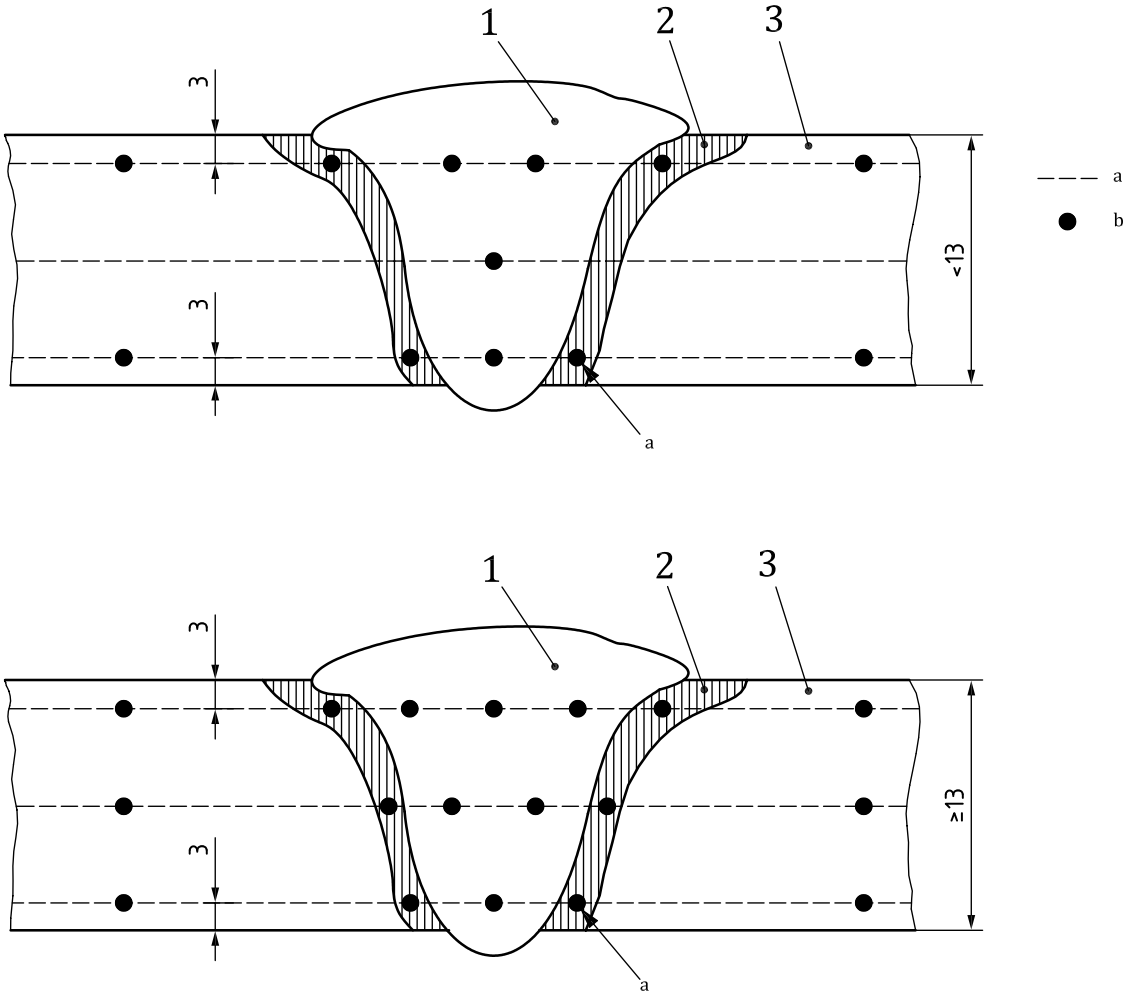

Key

1 weld

2 weld heat-affected zone (visible after etching)

3 parent metal

a Lines of survey.

b Hardness impressions: Impressions in the weld heat-affected zone should be located within 2 mm of the fusion boundary.

Figure 5 — Butt weld survey method for Rockwell hardness measurements

© ISO 2020 – All rights reserved

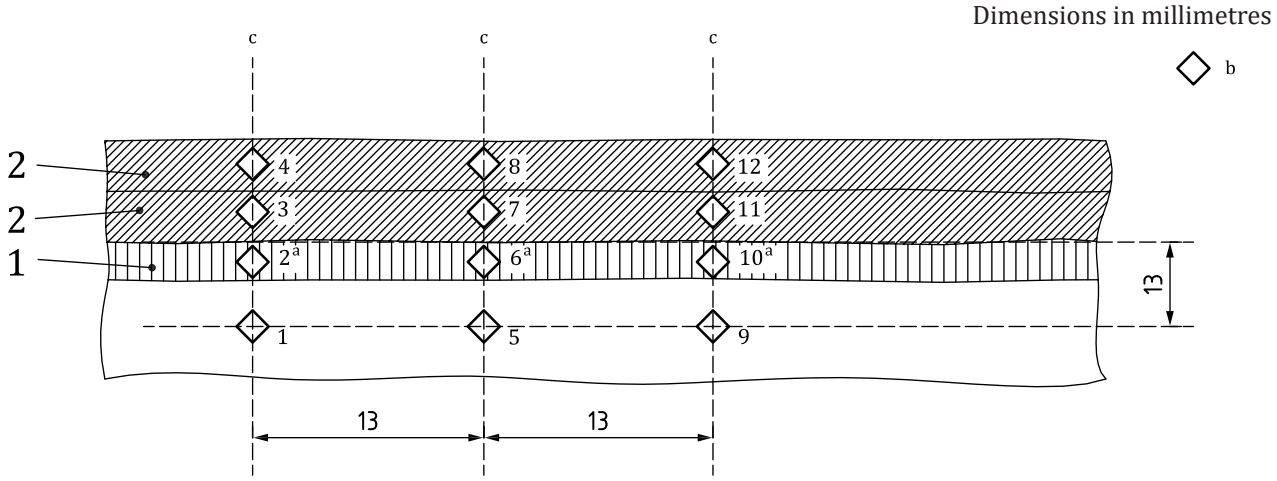

Key

1 weld heat-affected zone (visible after etching)

2 layer of weld overlay (visible after etching)

The Rockwell C hardness measurement method may be used subject to the requirements of 7.3.3.2. HRC hardness impressions in the HAZ shall be located within 2 mm of the fusion boundary.

a Using the Vickers or Rockwell 15N measurement methods, hardness impressions 2, 6 and 10 should be entirely within the heat-affected zone and located as close as possible to, but no more than 1 mm from, the fusion boundary between the weld overlay and HAZ.

b Hardness impressions.

c Lines of hardness survey indentations 1 to 12.

Figure 6 — Weld overlay

7.3.3.4 Hardness acceptance criteria for welds

Weld hardness acceptance criteria for steels selected using option 1 (see 7.1) shall be as specified in A.2.1.4. Alternative weld hardness acceptance criteria may be established from successful SSC testing of welded samples. SSC testing shall be in accordance with Annex B.

Weld-hardness acceptance criteria for steels qualified and/or selected using option 2 (see 7.2) may be established from successful SSC testing of welded samples. SSC testing shall be in accordance with Annex B.

7.4 Other fabrication methods

For steels that are subject to hardness change caused by fabrication methods other than welding, hardness testing shall be specified as part of the qualification of the fabrication process. Hardness testing shall be specified as part of the qualification of burning/cutting processes if any HAZ remains in the final product. The requirements, interpreted for the fabrication method, and hardness acceptance criteria of 7.3 shall apply.

The form and location of the samples for evaluation and testing shall be acceptable to the equipment user.

8 Evaluation of carbon and low alloy steels for their resistance to HIC/SWC

The equipment user shall consider HIC/SWC as defined in ISO 15156-1 when evaluating flat-rolled carbon steel products for sour service environments containing even trace amounts of H_2S and shall consider HIC/SWC testing of these products. Annex B provides guidance on test methods and acceptance criteria to evaluate resistance to HIC/SWC.

 © ISO 2020 – All rights reserved

The probability of HIC/SWC is influenced by steel chemistry and manufacturing route. The level of sulfur in the steel is of particular importance, typical maximum acceptable levels for flat-rolled and seamless products are 0,003 % mass fraction and 0,01 % mass fraction, respectively. Conventional forgings with sulfur levels less than 0,025 % mass fraction, and castings, are not normally considered sensitive to HIC or SOHIC.

NOTE 1 HIC/SWC leading to loss of containment has occurred only rarely in seamless pipe and other products that are not flat-rolled. Furthermore, seamless pipe manufactured using modern technology is much less sensitive to HIC/SWC than older products. Hence, there can be benefits in evaluating seamless pipe for HIC/SWC resistance for applications where the potential consequences of failure make this justifiable.

NOTE 2 The presence of rust, sulfur or oxygen, particularly together with chloride, in the service environment is thought to increase the probability of damage.

9 Marking, labelling, and documentation

Materials conforming with this document shall be made traceable, preferably by marking, before delivery. Suitable labelling or documentation is also acceptable.

For materials qualified and selected for a special application in accordance with Annex B, traceability shall include reference to the environmental conditions of the special application.

The equipment user may request the equipment or materials supplier to provide documentation of the materials used in equipment or components and their environmental service limits as defined in this document.

Table E.1 and Table E.2 provide designations that may be used to identify materials.

© ISO 2020 – All rights reserved

Annex A
(normative)

SSC-resistant carbon and low alloy steels (and requirements and recommendations for the use of cast irons)

A.1 General

This annex describes and lists SSC-resistant carbon and low alloy steels. Requirements for the use of cast irons are given in A.2.4.

Steels conforming with this annex might not resist SOHIC, SZC, HIC or SWC without the specification of additional requirements (see 7.2.2 and/or Clause 8).

NOTE A.2 is consistent with the previously established requirements of NACE MR0175.

At the time of publication of this document, there are no listings of steels approved for SSC region 2 (A.3) or SSC region 1 (A.4). Therefore, A.3 and A.4 indicate only properties typical of steels that are expected to be suitable for use under the defined conditions.

A.2 SSC-resistant carbon and low-alloy steels and the use of cast irons

A.2.1 General requirements for carbon and low alloy steels

A.2.1.1 General

Carbon and low-alloy steels shall conform with A.2.1.2 to A.2.1.9.

Carbon and low-alloy steels, products and components that conform with A.2 are, with stated exceptions, qualified in accordance with this document without further SSC testing. Nevertheless, any SSC testing that forms part of a materials manufacturing specification shall be carried out successfully and the results reported.

The majority of steels that conform with the general requirements of A.2 are not individually listed; however, for convenience, some examples of such steels are listed in Table A.2, Table A.3 and Table A.4.

NOTE 1 The carbon and low-alloy steels described/listed previously in NACE MR0175 (all revisions) were identified by extensive correlations of field failures/successes and laboratory data. The hardness limit of HRC 22 applied to most carbon and low-alloy steels is based on correlations of heat treatment, chemical composition, hardness and failure experience. The higher hardness limits for the chromium-molybdenum steels are based on similar considerations.

NOTE 2 It can be possible to qualify a carbon or low alloy steel not described or listed in the text or tables of A.2 for use in specific sour service applications or for a range of sour service in accordance with Option 2 (7.2).

A.2.1.2 Parent metal composition, heat treatment and hardness

Carbon and low-alloy steels are acceptable at 22 HRC maximum hardness provided they contain less than 1 % mass fraction nickel, are not free-machining steels and are used in one of the following heat-treatment conditions:

a) hot-rolled (carbon steels only);

b) annealed;

 © ISO 2020 – All rights reserved

c) normalized;

d) normalized and tempered;

e) normalized, austenitized, quenched, and tempered;

f) austenitized, quenched, and tempered.

A.2.1.3 Carbon steels acceptable with revised or additional restrictions

In addition to the restrictions of A.2.1.2, some carbon steels are acceptable subject to the following revised or additional restrictions.

a) Forgings produced in accordance with ASTM A105 are acceptable if the hardness does not exceed 187 HBW.

b) Wrought pipe fittings to ASTM A234, grades WPB and WPC are acceptable if the hardness does not exceed 197 HBW.

A.2.1.4 Welding

Welding and weld-hardness determinations shall be performed in accordance with 7.3.3.

Acceptable maximum hardness values for carbon steel, carbon manganese steel and low alloy steel welds are given in Table A.1.

As-welded carbon steels, carbon-manganese steels and low-alloy steels that conform with the hardness requirements of Table A.1 do not require post-weld heat treatment.

Tubular products with an SMYS not exceeding 360 MPa (52 ksi) and listed in Table A.2 are acceptable in the as-welded condition. For these products, hardness testing of welding procedures may be waived if agreed by the equipment user.

Some tubular products with an SMYS exceeding 360 MPa (52 ksi) (see A.2.2.2) may be acceptable in the as-welded condition if suitable qualified welding procedures are used. The conditions in Table A.1 shall be met.

Carbon steel, carbon manganese and low-alloy steel weldments that do not conform with the other requirements of this subclause shall be post weld heat treated after welding. The heat treatment temperature and its duration shall be chosen to ensure that the maximum weld zone hardness, determined in accordance with 7.3, shall be 250 HV or, subject to the restrictions described in 7.3.3, 22 HRC.

A minimum post weld heat treatment temperature of 621 °C (1 150 °F) shall be used for low alloy steels.

The acceptability of any effects on mechanical properties, other than hardness, caused by the chosen heat treatment and its duration shall be subject to the approval of the equipment user.

Welding consumables and procedures that produce a deposit containing more than 1 % mass fraction nickel are acceptable after successful weld SSC qualification by testing in accordance with Annex B.

© ISO 2020 – All rights reserved

Table A.1 — Maximum acceptable hardness values for carbon steel, carbon-manganese steel and low-alloy steel welds

Hardness test methods	Hardness test locations for welding procedure qualification	Maximum acceptable hardness
Vickers HV 10 or HV 5 or Rockwell HR 15N	Weld root: Base metal, HAZ and weld root metal as shown in Figure 2, Figure 3 or Figure 4	250 HV 70,6 HR 15N
	Base metal and HAZ for weld overlays as shown in Figure 6; see also A.2.1.5 b)	250 HV 70,6 HR 15N
	Weld cap: Base metal, HAZ and weld metal of unexposed weld cap as shown in Figure 2 or Figure 4	275 HV[a] 73,0 HR 15N
Rockwell HRC; see 7.3.3.2	As shown in Figure 5	22 HRC
	Base metal and HAZ for weld overlays as shown in Figure 6; see also A.2.1.5 b)	22 HRC

[a] The maximum shall be 250 HV or 70,6 HR 15N unless all three of the following conditions are met:

— equipment user agrees the alternative weld cap hardness limit;

— parent material(s) are over 9 mm thick;

— weld cap is not exposed directly to the sour environment.

A.2.1.5 Surface treatments, overlays, plating, coatings, linings, etc.

NOTE The composition and cracking resistance of overlays are addressed in ISO 15156-3.

Metallic coatings (electroplated and electroless plated), conversion coatings, plastic coatings and linings are not acceptable for preventing SSC.

Overlays applied by thermal processes such as welding, silver brazing, or spray metallizing systems are acceptable if they conform with one of the following requirements.

a) The heat-treated condition of the substrate is unchanged, i.e. it does not exceed the lower critical temperature during application of the overlay.

b) The maximum hardness and final heat-treated condition of the base metal substrate conform with A.2.1.2 and, in the case of welded overlays, A.2.1.4. This requirement may be waived in accordance with ISO 15156-3:2020, A.13.1. The maximum hardness and/or other properties of the weld deposit shall conform with the requirements of ISO 15156-3 or this document, as applicable.

Joining of dissimilar materials, such as cemented carbides to steels by silver brazing, is acceptable. The base metal after brazing shall conform with A.2.1.2.

Nitriding, with a maximum case depth of 0,15 mm (0,006 in), is an acceptable surface treatment if conducted at a temperature below the lower critical temperature of the alloy being treated.

A.2.1.6 Cold deformation and thermal stress relief

Carbon and low-alloy steels shall be thermally stress-relieved following any cold deforming by rolling, cold forging or other manufacturing process that results in a permanent outer fibre deformation greater than 5 %. Thermal stress relief shall be performed in accordance with an appropriate code or standard. The minimum stress-relief temperature shall be 593 °C (1 100 °F). The final maximum hardness shall be 22 HRC except for pipe fittings made from ASTM A234 grade WPB or WPC, for which the final hardness shall not exceed 197 HBW.

The above requirement does not apply to cold work imparted by pressure testing according to an applicable code or standard agreed by the equipment user.

 © ISO 2020 – All rights reserved

Cold-rotary straightened pipe is acceptable only where permitted in the applicable ISO or API product standards; see also A.2.2.3.4.

Cold-worked line pipe fittings of ASTM A53 Grade B, ASTM A106 Grade B, API 5L Grade X-42, ISO 3183 Grade L290, or lower-yield-strength grades with similar chemical compositions, are acceptable with cold strain equivalent to 15 % or less, provided the hardness in the strained area does not exceed 190 HBW.

SSC testing and qualification in accordance with Annex B may be used to justify other cold deformation limits.

A.2.1.7 Threading

Threads produced using a machine-cutting process are acceptable.

Threads produced by cold forming (rolling) are acceptable in steels that otherwise conform with the heat treatment and hardness requirements of A.2.1.2.

A.2.1.8 Cold deformation of surfaces

Cold deformation of surfaces is acceptable if caused by processes, such as burnishing, that do not impart more cold work than that incidental to normal machining operations (such as turning, boring, rolling, threading, drilling, etc.).

Cold deformation by controlled shot-peening is acceptable if applied to base materials that conform with this document and if restricted to a maximum shot size of 2,0 mm (0,080 in) and an Almen intensity not exceeding 10C. The process shall be controlled in accordance with SAE AMS-2430.

A.2.1.9 Identification stamping

The use of identification stamping using low-stress (dot-, vibratory-, and round V-) stamps is acceptable.

The use of conventional sharp V-stamping is acceptable in low-stress areas, such as the outside diameter of flanges.

Conventional sharp V-stamping shall not be performed in high-stress areas unless subsequently stress-relieved at a minimum temperature of 593 °C (1 100 °F).

A.2.2 Application to product forms

A.2.2.1 General

Except as modified below, the general requirements of A.2.1 shall apply to all product forms.

A.2.2.2 Pipe, plate, and fittings

Examples of tubular products that can conform with A.2.1 are shown in Table A.2.

Pressure vessel steels classified as P-No 1, Group 1 or 2, in Section IX of the ASME Boiler and Pressure Vessel Code are acceptable.

Products made from flat-rolled steels in contact with trace amounts of H_2S [i.e. even if p_{H_2S} is below 0,3 kPa (0,05 psi)] can be susceptible to HIC/SWC damage.

© ISO 2020 – All rights reserved

Table A.2 — Examples of tubular products that can conform with A.2.1

ISO specifications and grades	Other designations
ISO 3183 grades: L245 through L450	API Specification 5L grades: A and B and X-42 through X-65 ASTM A53 ASTM A106 grades A, B and C ASTM A333 grades 1 and 6 ASTM A524 grades 1 and 2 ASTM A381 class 1, Y35 to Y65

Pipe seam welds shall conform with A.2.1.

A.2.2.3 Downhole casing, tubing, and tubular components

A.2.2.3.1 ISO and API grades of casing and tubing are acceptable for the temperature ranges given in Table A.3.

A.2.2.3.2 Tubulars and tubular components made of Cr-Mo low-alloy steels (UNS G41XX0, formerly AISI 41XX, and modifications), if quenched and tempered in the tubular form, are acceptable if their hardness does not exceed 30 HRC and they have SMYS grades of 690 MPa (100 ksi), 720 MPa (105 ksi), and 760 MPa (110 ksi). The maximum yield strength for each grade shall be no more than 103 MPa (15 ksi) higher than the SMYS. SSC resistance shall be demonstrated by testing each test batch and shall conform with B.1 using the UT test.

A.2.2.3.3 Tubulars and tubular components made of Cr-Mo low-alloy steels (UNS G41XX0, formerly AISI 41XX and modifications), if quenched and tempered in the tubular form, are acceptable if the hardness does not exceed 26 HRC. These products should be qualified by SSC testing in accordance with B.1 using the UT test.

A.2.2.3.4 If tubulars and tubular components are cold-straightened at or below 510 °C (950 °F), they shall be stress-relieved at a minimum temperature of 482 °C (900 °F). If tubulars and tubular components are cold-formed (pin-nosed and/or box-expanded) and the resultant permanent outer fibre deformation is greater than 5 %, the cold-formed regions shall be thermally stress-relieved at a minimum temperature of 593 °C (1 100 °F).

If the connections of high-strength tubulars with hardnesses above 22 HRC are cold-formed, they shall be thermally stress-relieved at a minimum temperature of 593 °C (1 100 °F).

© ISO 2020 – All rights reserved

Table A.3 — Environmental conditions for which grades of casing and tubing are acceptable

For all temperatures	For ≥65 °C (150 °F)	For ≥80 °C (175 °F)	For ≥107 °C (225 °F)
ISO 11960[a] grades: H40 J55 K55 M65 L80 type 1 C90 type 1 T95 type 1	ISO 11960[a] grades: N80 type Q R95[c] C110	ISO 11960[a] grades: N80 P110	ISO 11960[a] grade: Q125[b]
Proprietary grades as described in A.2.2.3.3	Proprietary Q&T grades with 760 MPa (110 ksi) or less maximum yield strength. Casings and tubulars made of Cr-Mo low-alloy steels as described in A.2.2.3.2.	Proprietary Q&T grades with 965 MPa (140 ksi) or less maximum yield strength.	

Temperatures given are minimum allowable service temperatures with respect to SSC.

Low temperature toughness (impact resistance) is not considered, equipment users shall determine requirements separately.

[a] For the purposes of this provision, API 5CT is equivalent to ISO 11960:2020.

[b] Types 1 and 2 based on Q&T, Cr-Mo chemistry to 1 036 MPa (150 ksi) maximum yield strength. C-Mn steels are not acceptable.

[c] In earlier editions of ISO 11960/API 5CT this grade was named C95. For the purposes of this provision, R95 and the former C95 are deemed equivalent.

A.2.2.4 Bolting and fasteners

Bolting that can be exposed directly to a sour environment, or that is buried, insulated, equipped with flange protectors or otherwise denied direct atmospheric exposure or direct open seawater exposure, shall conform to the general requirements of A.2.1.

Designers and users should be aware that it can be necessary to lower equipment pressure ratings when using SSC-resistant bolting and fasteners. The use of SSC-resistant bolting and fasteners with API flanges shall be in accordance with ISO 10423.

Table A.4 — Acceptable bolting materials

Bolts	Nuts
ASTM A193 grade B7M ASTM A320 grade L7M	ASTM A194 grades 2HM, 7M

A.2.3 Application to equipment

A.2.3.1 General

The general requirements of A.2.1 apply, with the following modifications.

A.2.3.2 Drilling blowout preventers

A.2.3.2.1 Shear blades

The high-strength steels used for blowout-preventer (BOP) shear blades can be susceptible to SSC. The suitability of shear blades that do not conform with this annex is the responsibility of the equipment user.

© ISO 2020 – All rights reserved

A.2.3.2.2 Rams

Rams manufactured in quenched and tempered Cr-Mo low-alloy steels (UNS G41XX0, formerly AISI 4IXX, and modifications) are acceptable if the hardness does not exceed 26 HRC. If the hardness of these alloys exceeds 22 HRC, careful attention shall be paid to chemical composition and heat treatment to ensure their SSC resistance. SSC testing, as agreed with the equipment user, shall demonstrate that the performance of the alloy meets or exceeds that of field proven material.

A.2.3.2.3 Drilling, well construction and well-servicing equipment exposed only to drilling fluids of controlled composition

Given the high strength often needed, drilling equipment might not conform with ISO 15156 (all parts). In such cases, the primary means for avoiding SSC is control of the drilling or well-servicing environment. As service stresses and material hardness increase, drilling-fluid control becomes increasingly important. Care shall be taken to control the drilling environment by maintenance of drilling-fluid hydrostatic head and fluid density to minimize formation-fluid in-flow and by the use of one or more of the following:

a) maintenance of pH 10 or higher to neutralize H_2S in the drilled formation;

b) use of chemical sulfide scavengers;

c) use of a drilling fluid in which oil is the continuous phase.

A.2.3.3 Compressors and pumps

A.2.3.3.1 Compressor impellers

UNS G43200 (formerly AISI 4320) and a modified version of UNS G43200 that contains 0,28 % mass fraction to 0,33 % mass fraction carbon are acceptable for compressor impellers at a maximum yield strength of 620 MPa (90 ksi) provided they have been heat-treated in accordance with the following three-step procedure.

a) Austenitize and quench.

b) Temper at 621 °C (1 150 °F) minimum temperature, but below the lower critical temperature. Cool to ambient temperature before the second temper.

c) Temper at 621 °C (1 150 °F) minimum, but lower than the first tempering temperature. Cool to ambient temperature.

A.2.3.3.2 Special provisions for compressors and pumps

Soft carbon steel and soft, low-carbon iron are acceptable as gaskets.

Cast irons in accordance with A.2.4 are acceptable.

A.2.4 Requirements for the use of cast irons

A.2.4.1 General

Grey, austenitic and white cast irons shall not be used for pressure-containing parts. These materials may be used for internal components if their use is permitted by the equipment standard and has been approved by the equipment user.

Ferritic ductile iron in accordance with ASTM A395 is acceptable for equipment unless otherwise specified by the equipment standard.

© ISO 2020 – All rights reserved

A.2.4.2 Packers and subsurface equipment

The listed cast irons are acceptable for the following applications.

Table A.5 — Cast irons acceptable for packers and other subsurface equipment

Component	Cast iron
Drillable packer components	Ductile iron (ASTM A536, ASTM A571/A571M) Malleable iron (ASTM A220, ASTM A602)
Compression members	Grey iron (ASTM A48, ASTM A278)

A.2.4.3 Compressors and pumps

Grey cast iron (ASTM A278, Class 35 or 40) and ductile (nodular) cast iron (ASTM A395) are acceptable as compressor cylinders, liners, pistons and valves.

A.3 SSC-resistant steels for use throughout SSC region 2

A.3.1 General

The steels listed in A.2 are acceptable.

The properties of steels typical of those that have been shown to meet the requirements for sour service throughout SSC region 2 are described below. Qualification according to Annex B shall be performed for steels that do not conform with A.2.

A.3.2 Downhole casing, tubing, and tubular components

Casing, tubing and tubular components made of Cr-Mo low-alloy steels (UNS G41XX0, formerly AISI 41XX, and modifications) have proven acceptable in the quenched and tempered condition. Typically, the actual yield strength of acceptable steels has been no more than 760 MPa (110 ksi) [an SMYS of approximately 550 MPa (80 ksi)] and their hardness has been no more than 27 HRC. Other requirements shall be in accordance with the applicable manufacturing specification.

A.3.3 Pipeline steels

Pipeline steels require appropriate restricted chemistries to ensure good weldability. Typically, SMYSs of up to 450 MPa (65 ksi) have proven acceptable. Typically, fabrication and field weld hardness should not exceed 280 HV. Other requirements shall be in accordance with the applicable manufacturing specification.

A.4 SSC-resistant steels for use throughout SSC region 1

A.4.1 General

Steels listed in A.2 and A.3 are acceptable.

The properties of steels typical of those that have been shown to meet the requirements for sour service throughout SSC region 1 are described below. Qualification according to Annex B shall be performed for steels which do not conform with A.2 or A.3.

A.4.2 Downhole casing, tubing, and tubular components

Casing, tubing and tubular components made of Cr-Mo low-alloy steels (UNS G41XX0, formerly AISI 41XX and modifications) have proven acceptable in the quenched and tempered condition. Typically, the actual yield strength of acceptable steels has been no more than 896 MPa (130 ksi) [an

© ISO 2020 – All rights reserved

SMYS of approximately 760 MPa (110 ksi)] and their hardness has been no more than 30 HRC. Other requirements shall be in accordance with the applicable manufacturing specification.

A.4.3 Pipeline steels

Pipeline steels require appropriate restricted chemistries to ensure good weldability. Typically, SMYSs of up to 550 MPa (80 ksi) have proven acceptable. Typically, fabrication and field weld hardness should not exceed 300 HV. Other requirements shall be in accordance with the applicable manufacturing specification.

© ISO 2020 – All rights reserved

Annex B
(normative)

Qualification of carbon and low-alloy steels for H_2S service by laboratory testing

B.1 Requirements

This annex specifies requirements for qualifying carbon and low-alloy steels for H_2S service by laboratory testing. Requirements are given for qualifying resistance to the following cracking mechanisms.

a) SSC qualification by laboratory testing shall require one or more of the following:

— SSC testing in accordance with the materials manufacturing specification; see also A.2.1.1;

— testing for specific sour service applications in accordance with B.3;

— testing for SSC regions 1 or 2 of Figure 1 in accordance with B.3 and footnote g of Table B.1;

— testing for sour service in all SSC regions of Figure 1 in accordance with B.3.

The qualification tests summarized demonstrate varying levels of resistance to SSC in sour environments. Some carbon and low-alloy steels described or listed in A.2 might not pass some of the laboratory test requirements listed above (see A.2.1).

b) SZC and SOHIC qualification shall require testing in accordance with B.4 using appropriate environmental conditions from those specified for SSC qualification.

c) HIC and SWC shall be qualified as follows:

— in any service environment (see B.5 and Table B.3);

— in specific sour service applications (see B.5 and Table B.3).

In all cases, the equipment user shall ensure that the testing chosen is appropriate to the conditions of the intended service(s). The acceptance of the testing chosen shall be documented.

B.2 Uses of laboratory qualifications

B.2.1 General

An overview of the alternative uses of laboratory qualifications is given in Figure B.1.

© ISO 2020 – All rights reserved

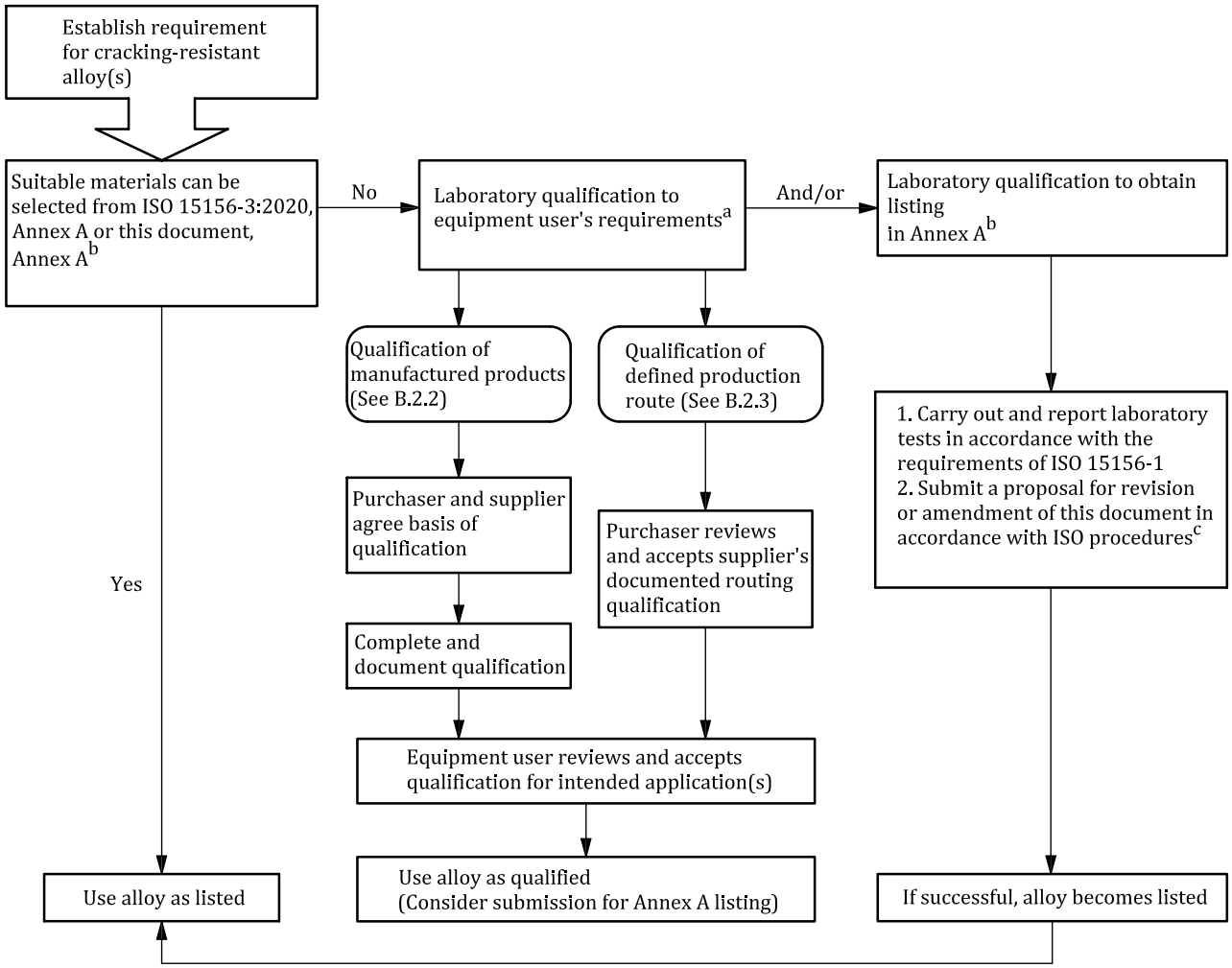

a This document addresses SSC, HIC, SOHIC and SZC of carbon and low-alloy steels. ISO 15156-3 addresses SSC, SCC and galvanically induced hydrogen stress cracking (GHSC) of corrosion-resistant alloys (CRAs) and other alloys.

b Annex A addresses SSC of carbon and low-alloy steels. ISO 15156-3:2020, Annex A addresses SSC, SCC and GHSC of CRAs and other alloys.

c See final paragraphs of "Introduction" for further information regarding document maintenance.

NOTE Flowchart omits qualification by field experience as described in ISO 15156-1.

Figure B.1 — Alternatives for alloy selection and laboratory qualification

B.2.2 Qualification of manufactured products

The user of this document shall define the qualification requirements for the material in accordance with ISO 15156-1 and this annex.

This definition shall include the application of the following:

a) general requirements (see ISO 15156-1:2020, Clause 5);

b) evaluation and definition of service conditions (see ISO 15156-1:2020, Clause 6);

c) material description and documentation (see ISO 15156-1:2020, 8.1);

d) requirements for qualification based on laboratory testing (see ISO 15156-1:2020, 8.3);

 © ISO 2020 – All rights reserved

e) report of the method of qualification (see ISO 15156-1:2020, Clause 9).

Appropriate test batches and sampling requirements shall be defined with regard for the nature of the product, the method of manufacture, testing required by the manufacturing specification and the required qualification(s) (SSC, SOHIC, SZC, HIC/SWC).

Samples shall be tested in accordance with Annex B for each cracking mechanism being qualified. A minimum of three specimens shall be tested per test batch. The test batch shall be qualified if all specimens satisfy the test acceptance criteria.

Re-testing is permitted as follows. If a single specimen fails to satisfy the acceptance criteria, the cause shall be investigated. If the source material conforms to the manufacturing specification, two further specimens may be tested. These shall be taken from the same source as the failed specimen. If both satisfy the acceptance criteria, the test batch shall be considered qualified. Further retests shall require the purchaser's agreement.

Testing of manufactured products may be carried out at any time after manufacture and before exposure to H_2S service.

Before the products are placed in H_2S service, the equipment user shall review the qualification and verify that it satisfies the defined qualification requirements. Products with a qualification that has been verified by the equipment user may be placed into H_2S service.

B.2.3 Qualification of a manufacturing source and route

A defined production route may be qualified for the production of qualified material.

A qualified production route may be followed to avoid order-release testing for H_2S-cracking resistance.

A materials supplier may propose to a materials purchaser that a qualified production route be used to produce qualified materials. The qualified production route may be used if the materials supplier and materials purchaser agree to its use.

A qualified production route may be used to produce qualified material for more than one materials user.

To qualify a production route, the material supplier shall demonstrate that a defined production route is capable of consistently manufacturing material that satisfies the applicable qualification test requirements of Annex B.

The qualification of a production route requires all of the following:

a) definition of the production route in a written quality plan that identifies the manufacturing location(s), all manufacturing operations and the manufacturing controls required to maintain the qualification;

b) initial testing of products produced on the defined production route in accordance with B.2.2, with verification that they satisfy the acceptance criteria;

c) Periodic testing to confirm that the product continues to have the required resistance to cracking in H_2S service; the frequency of "periodic" testing shall be defined in the quality plan and shall be acceptable to the purchaser; a record of such tests shall be available to the purchaser;

d) retaining and collating the reports of these tests and making them available to material purchasers and/or equipment users.

A material purchaser may agree additional quality control requirements with the manufacturer.

The accuracy of the quality plan may be verified by site inspection by an interested party.

© ISO 2020 – All rights reserved

B.2.4 Use of laboratory testing as a basis for proposing additions and changes to Annex A

Proposals for additions and changes shall be documented in accordance with ISO 15156-1. They shall also be subject to the following additional conditions and requirements.

— Laboratory testing for the evaluation of carbon and low-alloy steels for addition to Annex A is for use with steels that do not conform with the general requirements described in A.2.1.

— Addition of a carbon or low-alloy steel to A.2 requires the testing described in Table B.1 for all SSC regions of Figure 1 (see 7.2).

— Addition of a carbon or low-alloy steel to A.3 or A.4 requires the testing described in Table B.1 for the appropriate SSC region of Figure 1 (see 7.2).

— The steel being qualified by laboratory testing shall be selected in accordance with ISO 15156-1.

— Material representing a minimum of three separately processed heats shall be tested for SSC resistance in accordance with B.3.

— Sufficient data shall be provided to allow the members of ISO/TC 67 to assess the material and decide on the suitability of the material for inclusion into this document, by amendment or revision, in accordance with the ISO 15156 series maintenance process as described in the introduction.

B.3 Test procedures to evaluate the resistance of carbon and low-alloy steels to SSC

Qualification shall be in accordance with B.1 and, as appropriate, Table B.1.

Unless otherwise indicated, test requirements shall be in accordance with NACE TM0177.

Generally, testing is performed at ambient temperature [24 °C ± 3 °C (75 °F ± 5 °F)]. For testing at elevated temperatures, reference may be made to the guidance on test environments given in ISO 15156-3:2020, Annex B.

For materials testing to a materials manufacturing specification, reference should be made to the appropriate specification, and to A.1 and B.1.

Table B.1 — SSC laboratory testing for sour service

Qualification validity[f]	Test type[a,b,i]	Applied stress[c,d]	Environment	H_2S partial pressure	Acceptance criteria	Remarks
Specific application, or SSC region 1 or region 2 of Figure 1	FPB[j]	≥90 % AYS	5 % mass fraction NaCl + 0,4 % mass fraction CH_3COONa, pH adjusted to required value using HCl or NaOH[e]	Appropriate to intended application or SSC region	No SSC cracks in accordance with NACE TM0316 assessment method	Specific application or less severe environments. Region qualification subject to adequate "coverage"[g]
	UT or CR	≥90 % AYS			No SSC cracks in accordance with NACE TM0177 assessment method	
	DCB[h]	Not applicable			Assessment shall be in accordance with NACE TM0177. Acceptance criteria shall be by documented agreement[k]	Use as qualification at equipment user's discretion and with documented justification

© ISO 2020 – All rights reserved

Table B.1 *(continued)*

Qualification validity[f]	Test type[a,b,i]	Applied stress[c,d]	Environment	H_2S partial pressure	Acceptance criteria	Remarks
All SSC regions of Figure 1	FPB[j]	≥80 % AYS	NACE TM0177 Environment A (5 % mass fraction NaCl + 0,5 % mass fraction CH_3COOH)	100 kPa (15 psi) in accordance with NACE TM0177	No SSC cracks in accordance with NACE TM0316 assessment method	—
	UT or CR	≥80 % AYS			No SSC cracks in accordance with NACE TM0177 assessment method	
	DCB[h]	Not applicable			Assessment shall be in accordance with NACE TM0177. Acceptance criteria shall be by documented agreement[k]	Use as qualification at equipment user's discretion and with documented justification

[a] The test types are as follows:

— UT test in accordance with NACE TM0177, Method A;

— FPB test in accordance with NACE TM0316;

— CR test in accordance with NACE TM0177, Method C;

— DCB test in accordance with NACE TM0177, Method D;

— Other test specimens, including full-size components, may be used when appropriate. Their use shall be by agreement between the purchaser and the supplier.

[b] FPB, CR or UT tests are preferred for the qualification of welding and joining procedures; see 7.3 and 7.4. For welded samples, specimens shall normally be taken transverse to welds; testing shall be based on the actual yield strength of the lowest yield strength parent metal; side 4-point bend testing may be used, subject to the agreement of the equipment user. For details of side bend tests, see Reference [27].

[c] For applications where a low service stress level, as a proportion of yield strength, is guaranteed, the test stress may be reduced to the maximum service stress. In such cases, the tests and acceptance criteria shall be agreed with the equipment user. Such agreements shall be documented.

[d] AYS indicates the actual yield strength of material in finished form at the test temperature. The AYS shall be as defined in the product specification or the 0,2 % proof stress ($R_{p0.2}$) determined as the "non-proportional elongation" in accordance with ISO 6892-1.

[e] For SSC tests with pH control, the pH value during tests should be less than or equal to the required value. Control to within a range of 0,1 pH units is achievable in practice.

[f] See ISO 15156-1:2020, Clause 5, for more information regarding designs utilizing plastic design criteria.

[g] Testing under the conditions listed in Table B.2 provides qualification for use throughout a region.

[h] For special cases, including components of heavy section or of complex shape, DCB tests may be used to support designs based on fracture mechanics.

[i] Test types are not necessarily equivalent and results might not be directly comparable.

[j] When SOHIC and/or SZC evaluation of a test specimen are carried out, see 7.2.2, the requirements of this table and of B.4 shall be met.

[k] See ISO 11960 for information on tubing and casing grades C90 and T95.

© ISO 2020 – All rights reserved

Table B.2 — Test conditions

pH	Required H_2S partial pressures for tests kPa	
	Set of conditions for SSC region 1	Set of conditions for SSC region 2
3,5	—	1
4,0	0,3	—
4,5	1	10
5,5	10	100
6,5	100	—

B.4 Test procedures to evaluate the resistance of carbon and low-alloy steels to SOHIC and SZC

B.4.1 General

The test methods described in this annex have been used successfully to demonstrate sensitivity to SOHIC or SZC.

Materials shall have been qualified with respect to SSC resistance for the design conditions prior to SOHIC/SZC evaluation.

When evaluating welds, 7.3.3 shall also apply.

The validity of the test results for conditions other than those evaluated is defined in ISO 15156-1.

Test methods described for SOHIC and SZC are not standardized. Alternative tests are under development. The equipment user may choose other tests at his discretion. The justification of the use of such tests shall be documented.

B.4.2 Small-scale tests

B.4.2.1 Specimen selection

The test samples used to determine susceptibility to SOHIC/SZC shall be the apparently unfailed UT or FPB test specimens taken from successful SSC qualification testing. Steels selected using A.2 shall also undergo SSC testing according to B.1 prior to the SOHIC/SZC evaluation.

For small-scale testing of welds, specimens shall be taken transverse to the weld.

B.4.2.2 Evaluation and acceptance criteria for UT test specimens

One of the following evaluations and acceptance criteria for UT test specimens shall apply.

a) Heat the specimens to 150 °C and hold at that temperature for 2 h to remove absorbed hydrogen. Measure the tensile strength of the specimen. The tensile strength shall be not less than 80 % of the actual tensile strength of the material as determined on identical, previously unused, specimens.

b) Make at least two metallographic sections parallel to the sample axis. Examine the sections for possible ladder-like HIC features and other cracks related to SOHIC or to the soft zones of a weld (SZC). No ladder-like HIC indications nor cracks exceeding a length of 0,5 mm in the through thickness direction are allowed.

© ISO 2020 – All rights reserved

B.4.2.3 Evaluation and acceptance criteria for FPB test specimens

A wet-magnetic-particle examination shall be carried out on the side of the sample that was under tensile stress during H_2S exposure.

Below any magnetic particle indications running perpendicular to the stress axis, metallographic sectioning shall be made perpendicular to the indications or, in the absence of magnetic particle indications, at least two metallographic sections shall be made parallel to the stress axis of the specimen.

Sections produced in these ways shall be examined for possible ladder-like HIC features and other cracks related to SOHIC or to the soft zones of a weld (SZC). No ladder-like HIC features nor cracks exceeding a length of 0,5 mm in the through thickness direction are allowed.

To assist the detection of damage, specimens may be plastically deformed by 5 % in the previous bending direction prior to metallographic sectioning. Prior to deformation, the specimens shall be heated to 150 °C and maintained at that temperature for 2 h to remove absorbed hydrogen.

Damage developed on the tensile side of a specimen in the form of blisters less than 1 mm below the surface, or on the compression side regardless of the depth of the blister, may be disregarded for the assessment of SOHIC/SZC but shall be reported.

B.4.3 Full pipe ring tests

Full pipe ring tests may be used. BS 8701 describes a test and acceptance criteria.

NOTE Residual stress has been shown to play an important role in the initiation of SOHIC and SZC. It is sometimes considered that such stresses in field situations are better represented in large-scale specimens.

B.5 Test procedures and acceptance criteria to evaluate the resistance of carbon and low-alloy steels to HIC/SWC

Test procedures and acceptance criteria shall be in accordance with Table B.3.

Unless otherwise indicated, test requirements shall be in accordance with NACE TM0284.

© ISO 2020 – All rights reserved

Table B.3 — HIC/SWC test procedure and acceptance criteria

Product type	Applied stress	Environment	H_2S partial pressure	Acceptance criteria[e,g]	Qualification validity[f]
Flat-rolled steels or their products[a,b]	No applied stress	NACE TM0284 Test Solution A[c]	In accordance with NACE TM0284 for Test Solution A testing, i.e. 100 kPa (15 psi)[c]	Average values of the 3 sections of each individual specimen CLR ≤ 15 % CTR ≤ 5 % CSR ≤ 2 %	Any sour service
		NACE TM0284 Test Solution C, pH adjusted to required value using HCl or NaOH[d]	Appropriate to intended application[d]	Average values of the 3 sections of each individual specimen CLR ≤ 15 % CTR ≤ 5 % CSR ≤ 2 %	Specific, or less severe duty

[a] Qualification of seamless tubular products may also be appropriate; see Clause 8.

[b] The samples being taken to represent the general performance of an order should be agreed between the producer and the equipment user. The sampling of materials for testing shall conform with ISO 15156-1.

[c] The user is responsible for deciding whether this test environment is adequate to represent the severity of the intended application.

[d] Application-specific tests of steel for new or existing installations may be carried out. In such cases, the test duration shall be in accordance with NACE TM0284, dependent on the partial pressure of H_2S in the test gas.

[e] At the request of the equipment user, ultrasonic evaluation of coupons may be used to find and evaluate areas of cracking prior to the selection of locations for metallurgical sectioning. See also EFC Publication 16 and NACE TM0284.

[f] See ISO 15156-1:2020, Clause 5, for further information regarding designs utilizing plastic design criteria.

[g] Other acceptance criteria may be used subject to the documented approval of the equipment user.

© ISO 2020 – All rights reserved

Annex C
(informative)

Determination of H_2S partial pressure and use of alternative parameters

C.1 Calculation of partial pressure of H_2S for systems with a gas phase

C.1.1 General

The partial pressure of H_2S, p_{H_2S}, expressed in megapascals (pounds per square inch), may be calculated by multiplying the system total pressure by the mole fraction of H_2S in the gas phase as given in Formula (C.1):

$$p_{H_2S} = p \times \frac{x_{H_2S}}{100} \tag{C.1}$$

where

p is the system total absolute pressure, expressed in megapascals (pounds per square inch);

x_{H_2S} is the mole fraction of H_2S in the gas, expressed as a percentage.

For example, in a 70 MPa (10 153 psi) gas system, where the mole fraction of H_2S in the gas is 10 %, the H_2S partial pressure is 7 MPa (1 015 psi).

If the system total pressure and concentration of H_2S are known, H_2S partial pressures can also be estimated using Figure C.1.

C.1.2 Gas phase considerations, H_2S partial pressure and fugacity

The partial pressure concept, based on the ideal gas law, provides an accurate representation of thermodynamic activity of gas species like CO_2 and H_2S at near atmospheric total pressures. At higher pressures, the true thermodynamic activity (chemical potential), expressed as gas phase fugacity, drops below the partial pressure. Therefore, the partial pressure concept introduces an excess in severity that increases with total pressure. (Generally, this excess decreases with increasing temperature.) Hence, assessments of systems with a gas phase, based on partial pressure, imply an environmental severity that equals or exceeds that of the corresponding field service considered and are therefore an acceptable approach for any total pressure, in line with historical practice for evaluation of the severity of a sour environment.

Equipment users may employ H_2S fugacity rather than partial pressure to characterize the environmental severity of the production environment and to define the test environment representing field service, thereby reducing excess severity introduced by the partial pressure concept. The degree to which this excess would be reduced by considering gas phase fugacity depends on total pressure, temperature and composition of the hydrocarbon-water system.

NOTE Systems with an extreme total pressure, typically above 1 500 bar (21 756 psi), would be characterized as a dense fluid rather than gas or liquid and are preferably evaluated based on fugacity.

Fugacity models used in these calculations need to be validated to ensure they adequately reflect the severity of the production environment and that all the test conditions applied are at least as severe, with respect to the potential mode of failure, as those defined to occur in the field service

© ISO 2020 – All rights reserved

(see ISO 15156-1:2020 8.3.4). This generally includes thermodynamic analysis of both production and test environments and verification of the thermodynamic model under these conditions, along with confirmation by physically testing.

C.1.3 Aqueous phase considerations, H_2S concentration and chemical activity

Since corrosion cracking occurs in the aqueous phase, it is acceptable to assess the likelihood of cracking on the basis of H_2S dissolved in the aqueous phase instead of H_2S partial pressure in the gas phase. At near atmospheric pressure, assessments based on gas phase partial pressure, gas phase fugacity, aqueous concentration or aqueous phase chemical activity are all equivalent. However, at higher pressure, thermodynamic activity, be it fugacity in the gas phase as discussed above or chemical activity in the aqueous phase, deviates from strictly ideal partial pressure and aqueous concentration, respectively.

NOTE For the purpose of this discussion, fugacity and chemical activity can be considered equivalent as they are based on the same thermodynamic equilibrium considerations, using the chemical potential concept. Note that the effect of salinity of the aqueous phase should be considered as well. This is commonly accounted for by including an activity coefficient in the activity calculation.

Generally, as for gas phase fugacity, assessments based on chemical activity or aqueous concentration imply a more modest environmental severity than those based on partial pressure. Hence the principle given in ISO 15156-1:2020 8.3.4 as quoted above, applies: when using these parameters, the equipment user needs to demonstrate that the severity of the environment is properly taken into account, which generally includes detailed thermodynamic analysis.

NOTE 1 Fugacity can be considered an “effective partial pressure”, incorporating the non-ideal thermodynamic effects in the real gas that are ignored in the partial pressure derived from the ideal gas law. It is dependent on and generally calculated from the total pressure, the mole fraction of the species in the mixture and its fugacity coefficient, which in turn depends on temperature. The concept of fugacity is applicable to all phases, gas or liquid, and can be thought of as “escaping tendency” — the driver for a component to leave a phase. At equilibrium, the fugacity for each component is the same in all phases of a mixture, gas or liquid. In this standard, the term fugacity is primarily used as a property of species in the gas phase.

NOTE 2 Activity or chemical activity can be considered a “pseudo mole fraction”, and incorporates the non-ideal thermodynamic effects in the real liquid phase that are ignored if just concentration is accounted for. Activity is meaningless if the reference state is not specified. Activity also incorporates the effect of brine salinity on a species. Activity is often expressed as the mole fraction of the species multiplied by an activity coefficient. Since activity and fugacity are unambiguously related and are derived from the thermodynamic concept of chemical potential (partial Gibbs free energy), it is sufficient to specify either activity or fugacity. In this document, the term chemical activity is primarily used as a property of species in the liquid or aqueous phase.

NOTE 3 Examples of non-ideal thermodynamic effects and their analysis in the context of sour corrosion cracking are given in the following publications NACE C2014, papers 3870, 4243, 4285 and NACE C2015, paper 6050.

As indicated in the definitions given in ISO 15156-1:2020, Clause 3, fugacity is a function of pressure, temperature, and mixture composition; the impact of activity is further complicated by the salinity of the aqueous phase. Care shall be taken to ensure thermodynamic analyses apply valid parameters.

NOTE 4 The *in-situ* pH, referred to as a factor affecting corrosion cracking, is defined based on the chemical activity of protons in the water phase. This activity in turn depends on the CO_2 and H_2S chemical activities in the water phase which are equivalent to the respective CO_2 and H_2S fugacities. This implies high pressures have an effect on pH, which can be accounted for by thermodynamic analysis.

 © ISO 2020 – All rights reserved

C.2 Calculations of effective H_2S partial pressure for gas-free liquid systems

C.2.1 General

For liquid systems (for which no equilibrium gas composition is available), the effective thermodynamic activity of H_2S is defined by a virtual partial pressure of H_2S that may be determined in the following way.

a) Determine the bubble-point pressure, p_B, of the fluid at operating temperature by any suitable method.

NOTE For a liquid-full pipeline downstream of gas separation units, a good approximation for bubble-point pressure is the total pressure of the last gas separator.

b) Determine the mole fraction of H_2S in the gas phase at bubble-point conditions by any suitable method.

c) Calculate the partial pressure of H_2S, p_{H_2S}, expressed in megapascals (pounds per square inch), in the gas at the bubble point as given in Formula (C.2):

$$p_{H_2S} = p_B \times \frac{x_{H_2S}}{100} \tag{C.2}$$

where

p_B is the bubble-point pressure, expressed in megapascals (pounds per square inch);

x_{H_2S} is the mole fraction of H_2S in the gas, expressed as a percentage.

d) Use this as the H_2S partial pressure for the liquid system. This value can be used to determine whether a system is sour in accordance with option 1 (see 7.1) or to determine its degree of sourness in accordance with option 2 (see 7.2).

© ISO 2020 – All rights reserved

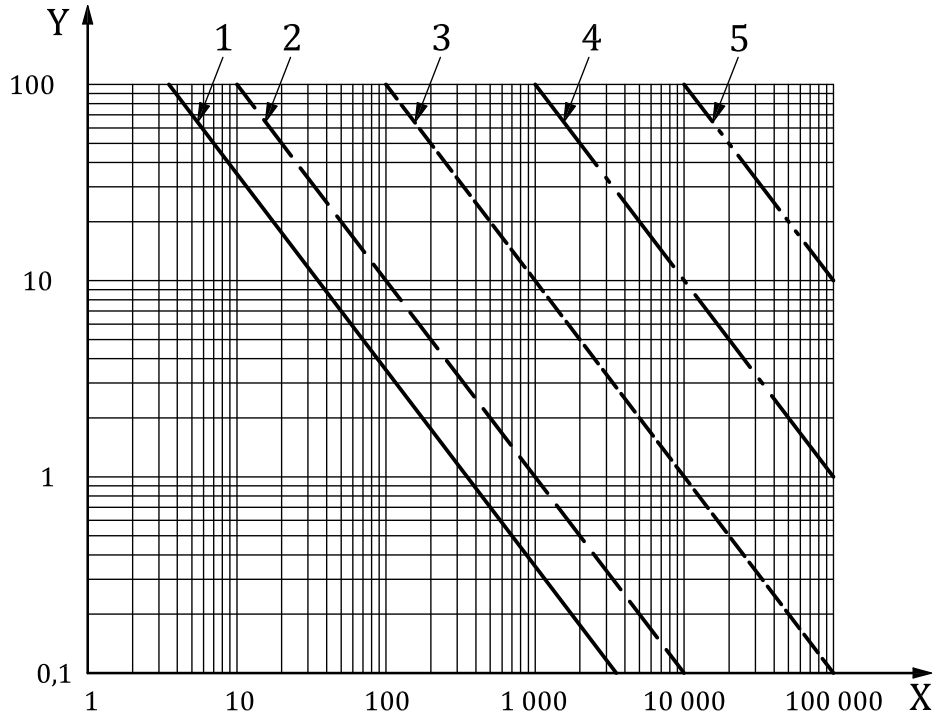

Key

X mole fraction H_2S in gas, expressed in percent volume fraction times 10^4

NOTE Percent volume fraction times 10^4 is the equivalent of the deprecated unit "parts per million by volume."

Y total absolute pressure, expressed in megapascals

1 p_{H_2S} = 0,3 kPa

2 p_{H_2S} = 1 kPa

3 p_{H_2S} = 10 kPa

4 p_{H_2S} = 100 kPa

5 p_{H_2S} = 1 000 kPa

Figure C.1 — H_2S partial pressure isobars in sour-gas systems

e) Thermodynamic models indicate that the bubble-point approach above in a) to d) may not adequately represent environmental severity for high total pressure gas-free liquid applications [oil wells with a total pressure typically above 350 bar (5 076 psi)] with bubble-point pressures significantly lower than the total pressure. In these instances, fugacity or activity calculations are recommended.

C.2.2 Considerations for high pressure gas-free oil wells, H_2S activity

The above approach assumes the H_2S severity of the environment is adequately represented by p_{H_2S} at bubble-point at any pressure higher than the bubble-point. This assumption is generally correct at low to moderate pressures, but is not necessarily true at high pressures.

For gas-free liquid systems operating well above the bubble-point, increasing the pressure does not result in increased concentration of H_2S in the aqueous phase, but does increase the chemical activity of H_2S in water (resulting from the Poynting correction factor for the effect of compressibility of the liquid on H_2S). Hence, the environment behaves as if there is more H_2S.

 © ISO 2020 – All rights reserved

NOTE The Poynting correction factor describes the effect of pressure on the fugacity (or chemical activity) of a gas species, e.g. CO_2 or H_2S, in the liquid phase. This effect derives from the liquid's compressibility under pressure. Commonly the concentration of a gas species dissolved in a liquid phase is described by Henry's law, stating proportionality between the gas species partial pressure and its dissolved concentration. To incorporate non-ideal thermodynamic effects in gas and liquid, the extended or "ensemble" Henry's law uses fugacity instead of partial pressure and activity coefficient and Poynting correction factor as multipliers for the species' concentration in the liquid.

An example oil well case assessment showed that at total pressures typically exceeding 350 bar to 500 bar (5 076 psi to 7 252 psi), H_2S fugacity could surpass the bubble-point p_{H_2S}, rendering the latter an inadequate indicator of environmental severity (see NACE C2014, paper 3870).

In line with ISO 15156-1:2020, 8.3.4 as also quoted in C.1 above, the severity of the environment for such cases is more appropriately represented by H_2S chemical activity (or equivalent fugacity) at pressure than by p_{H_2S} at bubble-point. It is therefore recommended that, at least for high pressure gas-free oil wells, a thermodynamic analysis considering aqueous chemical activity is performed to ensure environmental severity is properly characterized in the H_2S cracking assessment. This is reflected in item e) above.

© ISO 2020 – All rights reserved

Annex D
(informative)

Recommendations for determining pH

The use of Figure 1 requires the determination of in situ pH for the production conditions. Figures D.1 to D.5 (adapted from Reference [25]) give general guidance for the determination of an approximate pH value of the water phase for various conditions. pH determined in this way may be used if no proven calculation or reliable in situ measuring techniques are available. The likely error band may be taken as $^{+0,5}_{0}$ pH units.

In Figures D.1 to D.5, the ordinate axis is in situ pH. pH values routinely reported for depressurized water samples should not be mistaken as valid in situ pH values.

The in situ pH can also be influenced by the presence of organic acids, such as acetic acid, propionic acid, etc. (and their salts), that are not considered in Figures D.1 to D.5. The importance of the influences of these acids on in situ pH and on the results of conventional water analyses are described in EFC Publication 17. Analysis for these components should be made in order to make the necessary adjustments to the calculated in situ pH.

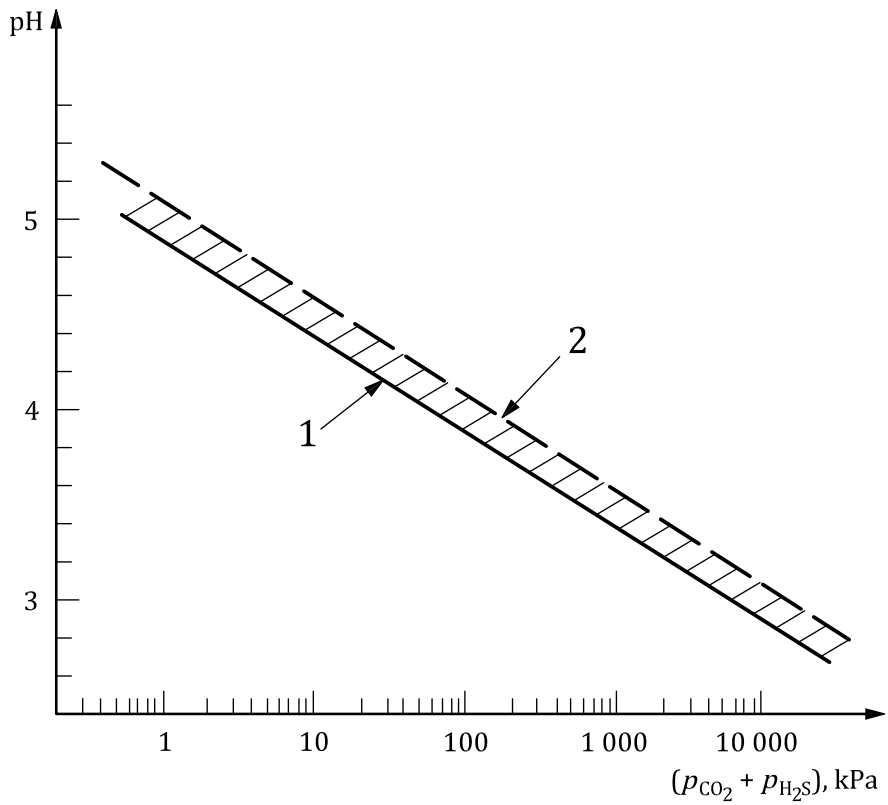

Key

1 T = 20 °C

2 T = 100 °C

Figure D.1 — pH of condensed water under CO_2 and H_2S pressure

© ISO 2020 – All rights reserved

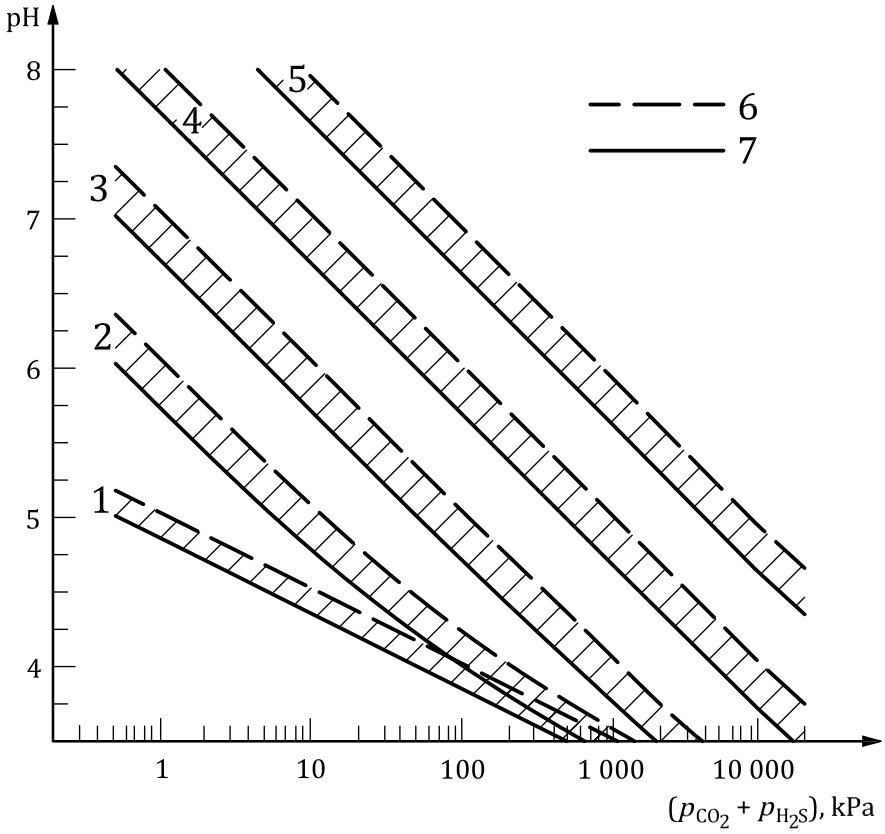

Key

1 HCO_3^- = 0 meq/l

2 HCO_3^- = 0,1 meq/l

3 HCO_3^- = 1 meq/l

4 HCO_3^- = 10 meq/l

5 HCO_3^- = 100 meq/l

6 T = 100 °C

7 T = 20 °C

Figure D.2 — pH of condensate water (wet gas) or formation waters containing bicarbonate (undersaturated in $CaCO_3$) under CO_2 and H_2S pressure

© ISO 2020 – All rights reserved

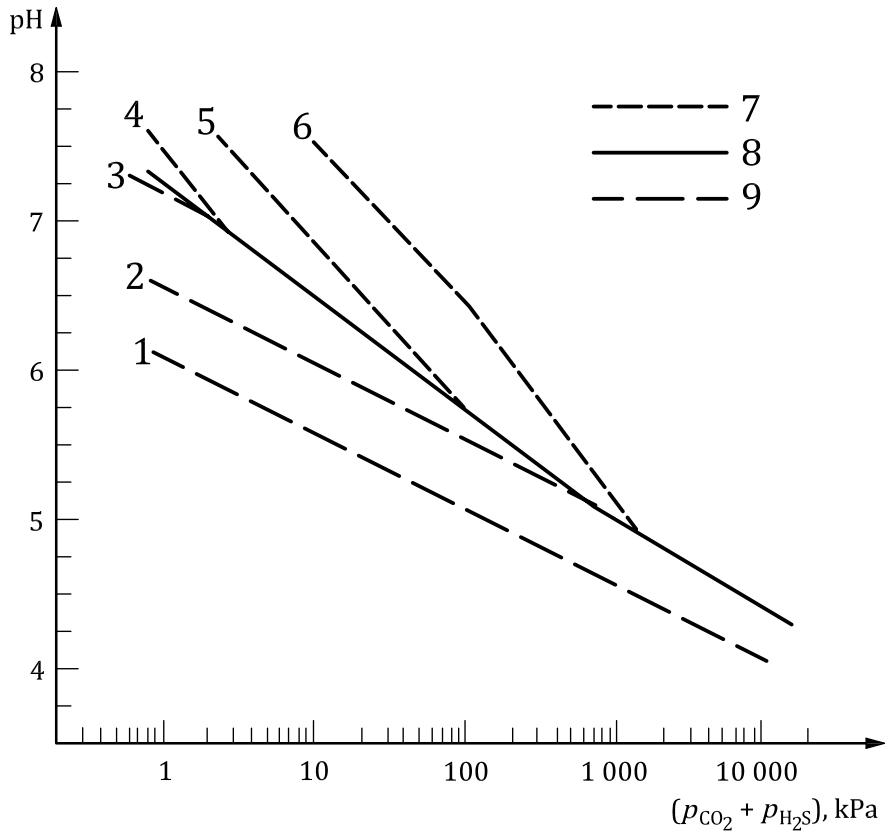

Key

1 Ca^{2+} = 1 000 meq/l

2 Ca^{2+} = 100 meq/l

3 Ca^{2+} = 10 meq/l

4 HCO_3^- = 10 meq/l

5 HCO_3^- = 30 meq/l

6 HCO_3^- = 100 meq/l

7 $Ca^{2+} < HCO_3^-$

8 $Ca^{2+} = HCO_3^-$

9 $Ca^{2+} > HCO_3^-$

Figure D.3 — pH of formation waters (super)saturated in $CaCO_3$ (stoichiometric or non-stoichiometric) under CO_2 and H_2S pressure at 20 °C

© ISO 2020 – All rights reserved

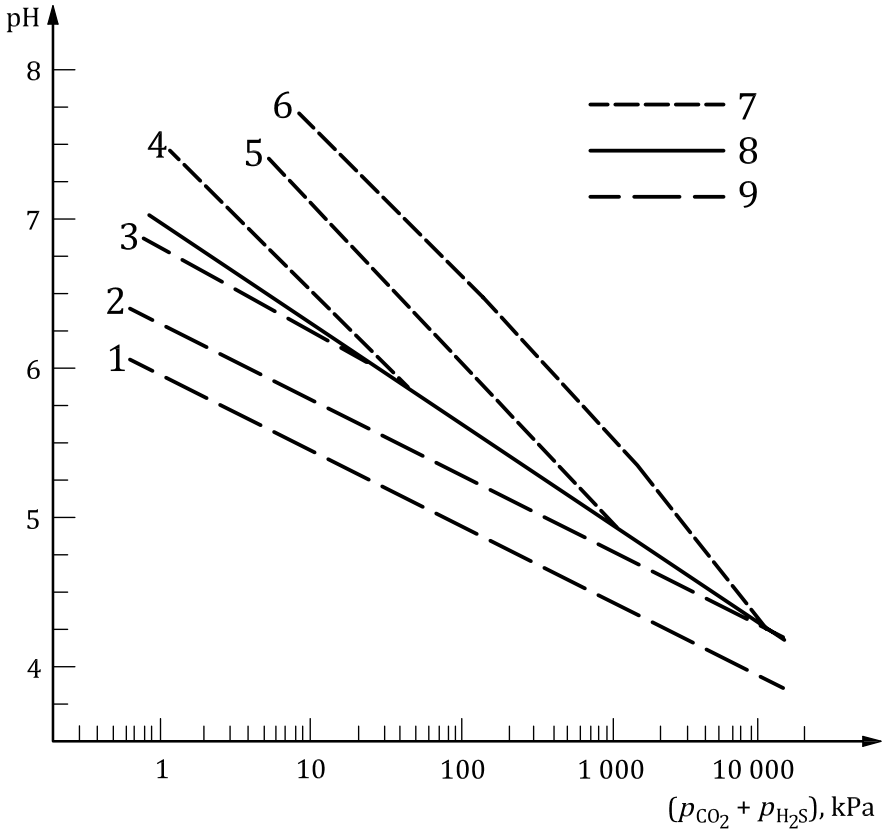

Key

1 Ca^{2+} = 1 000 meq/l

2 Ca^{2+} = 100 meq/l

3 Ca^{2+} = 10 meq/l

4 HCO_3^- = 10 meq/l

5 HCO_3^- = 30 meq/l

6 HCO_3^- = 100 meq/l

7 $Ca^{2+} < HCO_3^-$

8 $Ca^{2+} = HCO_3^-$

9 $Ca^{2+} > HCO_3^-$

Figure D.4 — pH of formation waters (super)saturated in $CaCO_3$ (stoichiometric or non-stoichiometric) under CO_2 and H_2S pressure at 60 °C

© ISO 2020 – All rights reserved

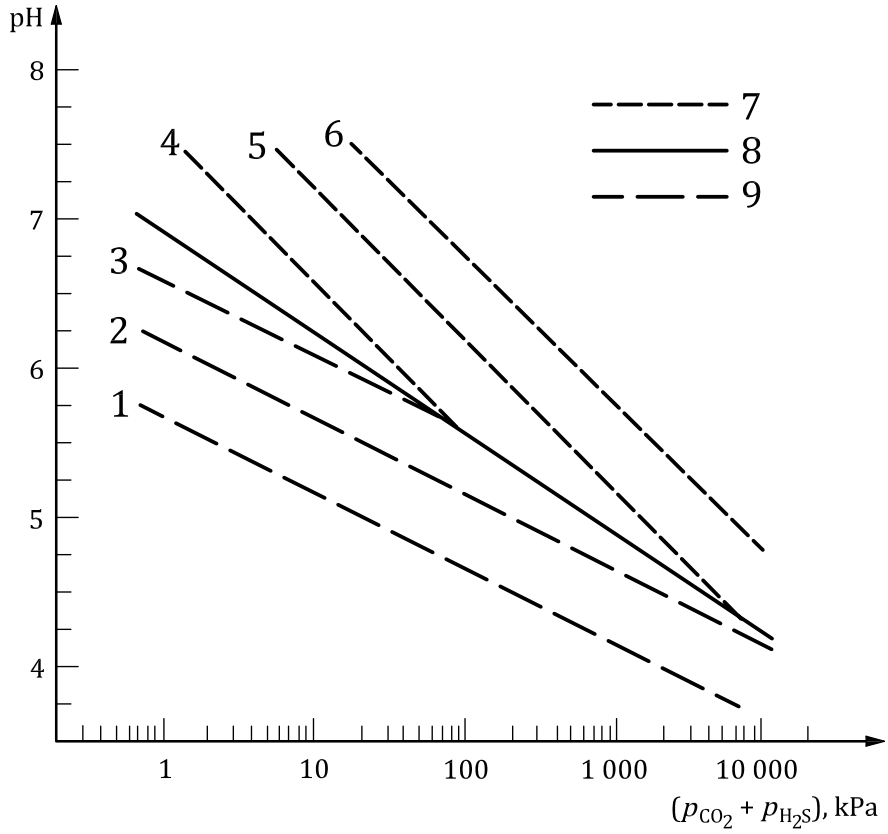

Key

1 Ca^{2+} = 1 000 meq/l

2 Ca^{2+} = 100 meq/l

3 Ca^{2+} = 10 meq/l

4 HCO_3^- = 10 meq/l

5 HCO_3^- = 30 meq/l

6 HCO_3^- = 100 meq/l

7 $Ca^{2+} < HCO_3^-$

8 $Ca^{2+} = HCO_3^-$

9 $Ca^{2+} > HCO_3^-$

Figure D.5 — pH of formation waters (super)saturated in $CaCO_3$ (stoichiometric or non-stoichiometric) under CO_2 and H_2S pressure at 100 °C

© ISO 2020 – All rights reserved

Annex E
(informative)

Information that should be supplied for material purchasing

Column 2 of Table E.1 and Table E.2 should be completed by the materials purchaser. Acceptable/required options should be indicated.

NOTE The designation ISO 15156-2A, in column 5, is generally equivalent to previously specifying carbon steels, low-alloy steels or cast irons in accordance with NACE MR0175.

Table E.1 — Minimum information for material purchasing

Purchaser's reference				
Equipment type				
Preferred steel (or cast iron) type and/or grade				
Governing sour service specification: ISO 15156 (all parts) **Materials requirements for this purchase order**		**Reference (sub)clause in ISO 15156-2**	**Remarks**	**Sour-service designation ISO 15156-x, (multiple codes can be required)**
SSC resistance option 1: Carbon steel, low-alloy steel or cast iron for sour service selected from A.2	Yes/No	7.1	—	2A
SSC resistance option 2: Carbon or low-alloy steel for specific sour-service applications or for ranges of sour service	Yes/No	7.2	If selected, see also 5.3 and Table E.2	—
HIC resistance: (a) Material for any sour service?	Yes/No	Clause 8 and B.5	—	2H
(b) Material for specific sour-service applications or for ranges of sour service?	Yes/No		If selected, see also 5.3 and Table E.2	—

© ISO 2020 – All rights reserved

Table E.2 — Additional information for SSC testing and other special cases

Purchaser's reference				
Materials requirements for this purchase order		**Reference (sub)clause in ISO 15156-2**	**Remarks**	**Sour service designation ISO 15156-x, (multiple codes can be required)**
Resistance to SSC following option 2	**Indicate preferred options**	7.2	—	—
a) Sour service for any SSC region? Test specimen type	Yes/No	7.2.1.4, Figure 1, Table B.1 and its Notes	UT test specimens by default	2R3
b) Sour service for SSC regions 2 and 1? Test specimen type	Yes/No	7.2.1.4, Figure 1 Table B.1 and its Notes	UT test specimens by default	2R2
c) Sour service for SSC region 1? Test specimen type	Yes/No	7.2.1.4, Figure 1 Table B.1 and its Notes	UT test specimens by default	2R1
d) Specific sour service application required? Test specimen type	Yes/No	7.2.1.4, Table B.1 and its Notes	Test condition data below required. UT test specimens by default	2S
Resistance to HIC for specific sour service application?	Yes/No	Clause 8 and Table B.1	Test condition data below required	2HS
Description of test conditions	—	Table B.1 and/or Table B.3	Default values per Table B.1, other values require documented justification according to ISO 15156-1	—
Test stress for SSC testing	—	—	% AYS (or as appropriate)	—
CO_2	—	—	MPa (psi)	—
H_2S	—	—	MPa (psi)	—
Temperature	—	—	°C	—
In situ pH	—	—	For calculation of pH, see Annex D.	—
Cl^- or other halide	—	—	mg/l	—
Elemental sulfur (S^0)	—	—	Present or absent	—
Special requirements	—	—	—	—
SOHIC and SZC resistance requirements	Yes/No	7.2.2 and B.4	SSC testing always required before SOHIC/SZC testing	2Z with SSC designation from above

© ISO 2020 – All rights reserved

Bibliography

[1] ISO 3183, *Petroleum and natural gas industries — Steel pipe for pipeline transportation systems*

[2] ISO 11960:2020, *Petroleum and natural gas industries — Steel pipes for use as casing or tubing for wells*

[3] ISO 18265, *Metallic materials — Conversion of hardness values*

[4] API Spec 5CT[3)], *Specification for Casing and Tubing*

[5] ANSI/API Spec 5L/ISO 3183[6)], *Specification for Line Pipe*

[6] ASME[4)] Boiler and Pressure Vessel Code, Section IX — *Qualification Standard For Welding and Brazing Procedures, Welders, Brazers, and Welding and Brazing Operators*

[7] ASTM A48/A 48M[5)], *Standard Specification for Gray Iron Castings*

[8] ASTM A53/A 53M, *Standard Specification for Pipe, Steel, Black and Hot-Dipped, Zinc-Coated, Welded and Seamless*

[9] ASTM A105/A105M, *Standard Specification for Carbon Steel Forgings for Piping Applications*

[10] ASTM A106, *Standard Specification for Seamless Carbon Steel Pipe for High-Temperature Service*

[11] ASTM A193/A193M, *Standard Specification for Alloy-Steel and Stainless Steel Bolting Materials for High-Temperature Service or High Pressure Service and Other Special Purpose Applications*

[12] ASTM A194/A194M, *Standard Specification for Carbon and Alloy Steel Nuts for Bolts for High Pressure or High Temperature Service, or Both*

[13] ASTM A220/A220M, *Standard Specification for Pearlitic Malleable Iron*

[14] ASTM A234/A234M, *Standard Specification for Piping Fittings of Wrought Carbon Steel and Alloy Steel For Moderate and High Temperature Service*

[15] ASTM A278/A278M, *Standard Specification for Gray Iron Castings for Pressure-Containing Parts for Temperatures up to 650 °F (350 °C)*

[16] ASTM A320/A320M, *Standard Specification for Alloy-Steel and Stainless Steel Bolting Materials for Low-Temperature Service*

[17] ASTM A333/A333M, *Standard Specification for Seamless and Welded Steel Pipe for Low-Temperature Service and Other Applications with Required Notch Toughness*

[18] ASTM A381, *Standard Specification for Metal-Arc-Welded Steel Pipe for Use With High-Pressure Transmission Systems*

[19] ASTM A395/A395M, *Standard Specification for Ferritic Ductile Iron Pressure-Retaining Castings for Use At Elevated Temperatures*

[20] ASTM A524, *Standard Specification for Seamless Carbon Steel Pipe for Atmospheric and Lower Temperatures*

[21] ASTM A536, *Standard Specification for Ductile Iron Castings*

3) www.api.org

4) www.asme.org

5) www.astm.org

© ISO 2020 – All rights reserved

[22] ASTM A571/A571M, *Standard Specification for Austenitic Ductile Iron Castings for Pressure-Containing Parts Suitable for Low-Temperature Service*

[23] ASTM A602, *Standard Specification for Automotive Malleable Iron Castings*

[24] ASTM E140, *Standard Hardness Conversion Tables for Metals Relationship Among Brinell Hardness, Vickers Hardness, Rockwell Hardness, Rockwell Superficial Hardness, Knoop Hardness, and Scleroscope Hardness*

[25] Bonis M., Crolet J.-L., Practical aspects of the influence of *in situ* pH on H_2S-induced cracking. Corros. Sci. 1987, **27** pp. 1059–1070

[26] BS 8701[6)], *Full ring ovalization test for determining the susceptibility to cracking of linepipe steels in sour service. Test method*

[27] NACE Corrosion 2000, Paper 128, *A new device for side bend testing on pipe seam welds*

[28] NACE MR0176, *Metallic materials for sucker-rod pumps for corrosive oilfield environments*

[29] NACE MR0175, *Sulfide stress cracking resistant metallic materials for oilfield equipment*

[30] SAE-ASTM, *Metals and alloys in the unified numbering system, ISBN 0-7680-0407*

[31] ASTM E10, *Standard Test Method for Brinell Hardness of Metallic Materials*

[32] ASTM E18, *Standard Test Methods for Rockwell Hardness of Metallic Materials*

[33] ASTM E384, *Standard Test Method for Knoop and Vickers Hardness of Materials*

[34] NACE Corrosion 2014, paper 3870, *The Physical Chemistry Nature of Hydrogen Sulfide Gas as it Affects Sulfide Stress Crack Propagation in Steel*

[35] NACE Corrosion 2014, paper 4243, *Selecting Representative Laboratory Test Conditions for Mildly Sour Sulfide Stress Corrosion (SSC) Testing*

[36] NACE Corrosion 2014, paper 4285, *Laboratory simulation of oil and gas field conditions: important phase behavior considerations and approaches*

[37] NACE Corrosion 2015, paper 6050, *Conservatism in sour testing with hydrogen sulfide partial pressure exposures — towards a more consistent approach*

[38] EFC Publication 16[7)], *Guidelines on materials requirements for carbon and low alloy steels for H_2S-containing environments in oil and gas production*

[39] the ISO 15156 series maintenance website, http://www.iso.org/iso15156maintenance

6) www.bsigroup.com

7) www.efcweb.org

© ISO 2020 – All rights reserved

ICS 75.180.01
Price based on 48 pages

© ISO 2020 – All rights reserved